Protected by copyright. Copying for private or commercial purposes, in part or in whole, is not permitted unless authorised by Volkswagen AG. Volkswagen AG does not guarantee or accept any liability with respect to the correctness of information in this document. Copyright by Volkswagen AG.

Workshop Manual

Polo 1995 ➤

Diesel direct injection and glow plug system up to 09.99									
Engine ID	AGD	AHG	AKU						

Edition 07.2007

satelettronica

List of Workshop Manual Repair Groups

Repair Group

01 - Self-diagnosis

23 - Mixture preparation - injection

28 - Glow plug system

satelettronica

Protected by copyright. Copying for private or commercial purposes, in part or in whole, is not permitted unless authorised by Volkswagen AG. Volkswagen AG does not guarantee or accept any liability with respect to the correctness of information in this document. Copyright by Volkswagen AG.

Technical information should always be available to the foremen and mechanics, because their careful and constant adherence to the instructions is essential to ensure vehicle road-worthiness and safety. In addition, the normal basic safety precautions for working on motor vehicles must, as a matter of course, be observed.

All rights reserved.
No reproduction without prior agreement from publisher.

Copyright © 2015 Volkswagen AG, Wolfsburg

00050206520

Contents

01 - Self-diagnosis 1

1 Self-diagnosis 1
1.1 Features of self-diagnosis 1
1.2 Technical data of self-diagnosis 1
1.3 Connecting fault reader V.A.G 1551 and selecting engine electronics control unit 2

2 Fault memory 5
2.1 Reading fault memory 5
2.2 Fault table 6
2.3 Clear fault memory 15

3 Final control diagnosis 17
3.1 Performing final control diagnosis 17

4 Measured value blocks 20
4.1 Safety precautions 20
4.2 Read measured value block 20
4.3 Evaluating measured value blocks, engine codes AHG, AKU 21
4.4 Evaluating measured value blocks, engine code AGD 31

23 - Mixture preparation - injection 41

1 Repairing diesel direct injection system 41
1.1 Safety precautions 41
1.2 Rules for cleanliness 41
1.3 Fitting locations overview 42
1.4 Repairing injection pump 43
1.5 Repairing fuel filter 45
1.6 Repairing accelerator mechanism 46
1.7 Checking accelerator position sender G79 setting 47
1.8 Setting engine to TDC No. 1 cylinder, engine removed 48
1.9 Removing, installing and testing throttle valve housing 48
1.10 Removing and installing injection pump 49
1.11 Dynamically checking and adjusting commencement of injection 54
1.12 Checking timing 56
1.13 Removing and installing injectors 57
1.14 Repairing injectors 58

2 Sealing injection pump 60
2.1 Sealing quantity adjuster 60
2.2 Checking and adjusting quantity injected 62
2.3 Sealing distributor head 63
2.4 Sealing injection timing device cover 64

3 Checking components and functions 65
3.1 Line and component check with adapter cable (68-pin) V.A.G 1598/18A or adapter V.A.G 1598/22 65
3.2 Checking engine speed sender G28 65
3.3 Checking coolant temperature sender G62 67
3.4 Checking brake light switch F and brake pedal switch F47 69
3.5 Checking clutch pedal switch F36 70
3.6 Checking intake air temperature sender G42 72
3.7 Checking voltage supply for diesel direct injection system 74
3.8 Checking fuel temperature sender G81 75
3.9 Checking modulating piston movement sender G149 and metering adjuster N146 77
3.10 Checking needle lift sender G80 82
3.11 Checking injection timing control range 83
3.12 Checking throttle valve 87

Protected by copyright. Copyright by Volkswagen AG. Copyright by Volkswagen AG. Volkswagen AG does not guarantee or accept any liability with respect to the correctness of information in this document. Copyright by Volkswagen AG. Volkswagen AG does not guarantee or accept any liability with respect to the correctness of information in this document. Copyright by Volkswagen AG.
satelettronica

3.13 Checking exhaust gas recirculation valve N18 89
3.14 Checking speedometer sender G22 91
3.15 Checking accelerator position sender G79 92
4 Renewing, coding and matching engine control unit 96
4.1 Renewing engine control unit 96
4.2 Coding engine control unit 96
4.3 Adapting engine control unit to electronic immobilizer 97

28 - Glow plug system 99
1 Checking glow plug system 99
1.1 Checking glow plugs 100

Protected by copyright. Copying for private or commercial purposes, in part or in whole, is not permitted unless authorised by Volkswagen AG. Volkswagen AG does not guarantee or accept any liability with respect to the correctness of information in this document. Copyright by Volkswagen AG.

satelettronica

01 – Self-diagnosis

1 Self-diagnosis

1.1 Features of self-diagnosis

The diesel direct injection system control unit -J248- is equipped with a fault memory.

If faults occur in the sensors and components being monitored, they will be stored in the fault memory together with an indication of the type of fault.

Faults which occur temporarily (sporadically), are printed out with the addendum “sporadic fault”. These faults are indicated on display by the addendum “/SP”. The cause of sporadic faults can be e.g. a loose contact or a temporarily open circuit. If a sporadic fault does not occur again within 50 engine starts, it will be cleared from the fault memory.

If faults are recognised which affect the driving behaviour, the glow period warning lamp flashes.

The stored faults can be read out with the fault reader -V.A.G 1551- or the vehicle system tester -V.A.G 1552- ⇒ page 5 .

The fault memory must be erased after the faults have been eliminated ⇒ page 15 .

Note

General information on self-diagnosis can be found in the instruction manuals for the fault reader -V.A.G 1551- and the vehicle system tester -V.A.G 1552- .

1.2 Technical data of self-diagnosis

1.2.1 Technical data

- Data transfer between control unit and fault reader -V.A.G 1551- or vehicle system tester -V.A.G 1552- is carried out in “rapid data transfer” operating mode.
- Fault memory: Non-volatile memory and volatile memory[1)]

1) Will be cancelled after 50th engine start if fault has not occurred again.

1.2.2 Read control unit version

The control unit version is displayed when the fault reader -V.A.G 1551- or the vehicle system tester -V.A.G 1552- is connected and engine electronics control unit is selected ⇒ page 2 .

1.2.3 Selectable functions on use of the fault reader -V.A.G 1551- or vehicle system tester -V.A.G 1552-

The prerequisites for selecting the desired functions can be determined from the following table ⇒ page 2 .

satelettronica

1.2.4 Selectable functions under address word 01, engine electronics

Function		Prerequisite		
Functions on the fault reader -V.A.G 1551- or vehicle system tester -V.A.G 1552-		Engine stationary, ignition switched on	Engine running at idling speed	Vehicle being driven
02	Read fault memory	yes[2)]	yes	yes
03	Final control diagnosis	yes	yes	no
04	Basic setting	no	yes	no
05	Clear fault memory	yes	yes	yes
06	End output	yes	yes	yes
07	Code control unit	yes	no	no
08	Read measured value block	yes	yes	yes

2) Only carry out with ignition switched on, when engine does not start.

1.3 Connecting fault reader -V.A.G 1551- and selecting engine electronics control unit

Special tools and workshop equipment required

- Fault reader -V.A.G 1551- with diagnosis cable -V.A.G 1551/3-

Note

The vehicle system tester -V.A.G 1552- can be used instead of the fault reader -V.A.G 1551- , however a print-out is not possible.

Test prerequisite

- Battery voltage OK.
- Earth connections on engine and gearbox OK.
- Fuse 21 or 227 OK.

Protected by copyright. Copying for private or commercial purposes, in part or in whole, is not permitted unless authorised by Volkswagen AG. Volkswagen AG does not guarantee or accept any liability with respect to the correctness of information in this document. Copyright by Volkswagen AG.
satelettronica

Procedure

– Fold left storage compartment down.

– Connect fault reader -V.A.G 1551- with diagnosis cable -V.A.G 1551/3- .

When the fault reader has been connected:

– Depending upon desired function: Switch ignition on or start engine ⇒ page 1 , table “Selectable functions”.

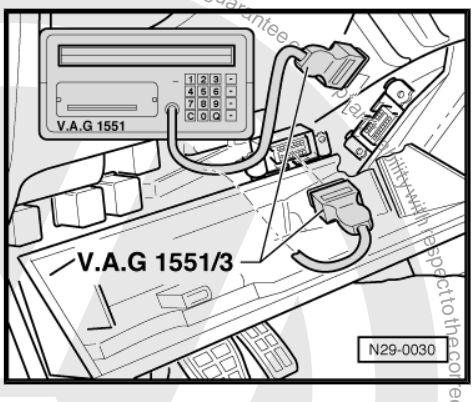

Note

- *If the display does not indicate as described in the work sequence:⇒ Fault reader -V.A.G 1551- operating instructions*
- *If due to an input fault “Fault in the data transfer!” is displayed, pull cable off fault reader -V.A.G 1551- , reconnect and repeat work step.*

Indicated on display:

```
V.A.G SELF-DIAGNOSIS                HELP
 1 - Rapid data transfer*
```

Indicated on display:

```
V.A.G SELF-DIAGNOSIS                HELP
 2 - Flash code output*
```

3) Appears alternately

– Operate fault reader taking into account the information on the display:

– Press button 1 for “Rapid data transfer”.

– Press buttons 0 and 1 for address word “Engine electronics” and confirm the input with Q button.

The fault reader -V.A.G 1551- display will show the control unit identification, e.g.:

```
038906013K  1.7l  R4  EDC   00SG 1808 ->
Coding 00005                   WSC 0000
```

- 038906013K = Part No. of the control unit (for up-to-date control unit version see parts catalogue)
- 1.9 l/1.7 l = engine displacement
- R4 = type of engine (4-cyl. in-line engine)
- EDC = Injection system (Electronic Diesel Control)
- SG = Gearbox type: manual gearbox (AG = automatic gearbox)
- 1808 = Control unit software version
- Coding 00005 = coding variant

Code number	For vehicles with
00001	Automatic gearbox (not relevant)
00002	Manual gearbox Engine codes AGD, AHG
00005	Manual gearbox Engine code AKU

Protected by copyright. Copying for private or commercial purposes, in part or in whole, is not permitted unless authorised by Volkswagen AG. Volkswagen AG does not guarantee or accept any liability with respect to the correctness of information in this document. Copyright by Volkswagen AG.
satelettronica

Protected by copyright. Copyright for private or commercial purposes, in part or in whole, is not permitted unless authorised by Volkswagen AG. Volkswagen AG does not guarantee or accept any liability with respect to the correctness of information in this document. Copyright by Volkswagen AG.

- ♦ WSC xxxxx = Workshop code from fault reader -V.A.G 1551- with which coding was last carried out. (If the factory coding has not been changed, WSC 00000 appears)

– Press ⇨ button.

Indicated on display:

```
Rapid data transfer                HELP
Select function XX
```

– Further measures see repair procedures.

satelettronica

2 Fault memory

2.1 Reading fault memory

Special tools and workshop equipment required

- Fault reader -V.A.G 1551- or vehicle system tester -V.A.G 1552- with diagnosis cable -V.A.G 1551/3-

Procedure

– Connect fault reader -V.A.G 1551- or vehicle system tester -V.A.G 1552- . Start engine and select “address word 01” of engine control unit. (Connect fault reader and select engine control unit ⇒ page 2)

Only when engine does not start:

– Switch on ignition.

– Switch on fault reader -V.A.G 1551- printer using [print] button.

The warning lamp in key must light up.

Indicated on display:

```
Rapid data transfer                HELP
Select function XX
```

– Operate fault reader -V.A.G 1551- taking into account the information on the display:

– Press buttons [0] and [2] for function “Read fault memory” and confirm entry with [Q] button.

The number of faults stored or “no fault recognised!” will be shown on the display.

```
X Faults recognised!
```

If one or more faults are stored:

The stored faults will be displayed and printed out one after the other.

When the stored faults have been printed out, the display will show:

```
Rapid data transfer                HELP
Select function XX
```

The fault reader is still partly required for further fault finding. Therefore, leave the engine running and the fault reader -V.A.G 1551- connected.

– Eliminate the printed out faults using the fault table ⇒ page 6 .

– Then erase fault memory ⇒ page 15 .

If no fault is stored:

– Press [→] button.

Indicated on display:

```
Rapid data transfer                HELP
Select function XX
```

– Press buttons [0] and [6] for function “End data transfer” and confirm entry with [Q] button.

Protected by copyright. Copying for private or commercial purposes, in part or in whole, is not permitted unless authorised by Volkswagen AG. Volkswagen AG does not guarantee or accept any liability with respect to the correctness of information in this document. Copyright by Volkswagen AG.
satelettronica

2.2 Fault table

Note

- *The fault table is structured according to the 5 digit fault code on the left.*
- *Explanations on the fault types (e.g. "open circuit/short-circuit to earth"): ⇒ Fault reader -V.A.G 1551- operating instructions.*
- *If components are indicated as faulty: First check the wiring and connectors to these components as well as the system earth connections according to current flow diagram. Only when no fault can be located here should the component be renewed. This is particularly relevant if faults are output as "sporadic" (SP).*
- *Clear fault memory after rectifying faults.*

Output on the fault reader -V.A.G 1551- printer	Possible fault cause	Possible effects	Fault elimination
00282[4] Throttle valve positioner -V60- Short to positive	♦ Short to positive ♦ Throttle valve positioner -V60- defective/jammed open	♦ Cold starting problems ♦ Cold idling problems ♦ Hard load changes ♦ Idling problems	– Check throttle valve positioner -V60- ⇒ page 87
Open circuit	♦ Line open circuit		
Open circuit/short to earth	♦ Wiring open circuit/ short to earth ♦ Throttle valve positioner -V60- defective		

4) Designated as throttle butterfly valve -N211- in the current flow diagram.

Output on the fault reader -V.A.G 1551- printer	Possible fault cause	Possible effects	Fault elimination
00513 Engine speed sender -G28- Implausible signal	♦ Defective engine speed sender -G28- ♦ Gap speed sender/ sender wheel too large ♦ Metal particles on engine speed sender -G28- or retainer loose	♦ Glow period warning lamp flashes ♦ Increased idling speed ♦ Poor starting characteristics ♦ Engine runs rough ♦ Reduced performance ♦ Rev. counter no display	– Check engine speed sender -G28- ⇒ page 65

satelettronica
Protected by copyright. Copying for private or commercial purposes, in part or in whole, is not permitted unless authorised by Volkswagen AG. Volkswagen AG does not guarantee or accept any liability with respect to the correctness of information in this document. Copyright by Volkswagen AG.

Output on the fault reader -V.A.G 1551- printer	Possible fault cause	Possible effects	Fault elimination
No signal	♦ Defective engine speed sender -G28- ♦ Wiring open or short circuit		

Output on the fault reader -V.A.G 1551- printer	Possible fault cause	Possible effects	Fault elimination
00522 Coolant temperature sender -G62- Short to earth	♦ Defective coolant temperature sender -G62- ♦ Wiring short to earth	♦ Black smoke when starting ♦ Engine preheating not functioning ♦ Glow plugs always operate for about 20 seconds	– Check coolant temperature sender -G62- ⇒ page 67
Open circuit/short to positive	♦ Defective coolant temperature sender -G62- ♦ Wiring open circuit or wiring short to positive		
Implausible signal	♦ Defective coolant temperature sender -G62-		

Output on the fault reader -V.A.G 1551- printer	Possible fault cause	Possible effects	Fault elimination
00523 Intake air temperature sender -G42- Short to earth	♦ Intake air temperature sender -G42- defective ♦ Wiring short to earth	♦ Engine preheating not functioning	– Check intake air temperature sender -G42- ⇒ page 72
Open circuit/short to positive	♦ Intake air temperature sender -G42- defective ♦ Wiring open circuit or short to positive		
00527 Intake manifold temperature sender -G72- [5)] Short to earth	♦ Defective intake manifold temperature sender -G72- ♦ Wiring short to earth	♦ Engine preheating not functioning	– Check intake manifold temperature sender -G72- ⇒ page 72

Protected by copyright. Copying for private or commercial purposes, in part or in whole, is not permitted unless authorised by Volkswagen AG. Volkswagen AG does not guarantee or accept any liability with respect to the correctness of information in this document. Copyright by Volkswagen AG.
satelettronica

Output on the fault reader -V.A.G 1551- printer	Possible fault cause	Possible effects	Fault elimination
Open circuit/short to positive	◆ Defective intake manifold temperature sender -G72- ◆ Wiring open circuit or short to positive		

5) Designated as intake air temperature sender -G42- in the current flow diagram and also tested as such in the component test.

Output on the fault reader -V.A.G 1551- printer	Possible fault cause	Possible effects	Fault elimination
00532 Supply voltage Implausible signal	◆ Terminal 30 voltage supply relay -J317- defective	◆ Various running problems including engine will not start	– Check voltage supply for diesel direct injection system control unit -J248- ⇒ page 74
00539 Fuel temperature sender -G81- Short to earth	◆ Fuel temperature sender -G81- defective ◆ Wiring short to earth	◆ Increased exhaust emissions	– Check fuel temperature sender -G81- ⇒ page 75
Open circuit/short to positive	◆ Fuel temperature sender -G81- defective ◆ Wiring open circuit or short to positive		

Output on the fault reader -V.A.G 1551- printer	Possible fault cause	Possible effects	Fault elimination
00542 Needle lift sender -G80- Input open	◆ Needle lift sender -G80- defective ◆ Wiring open or short circuit	◆ Glow period warning lamp flashes ◆ Engine runs rough ◆ Reduced performance ◆ Increased exhaust emissions	– Checking needle lift sender -G80- ⇒ page 82
Open circuit/short to positive			
Short to earth			

Protected by copyright. Copying for private or commercial purposes, in part or in whole is not permitted unless authorised by Volkswagen AG. Volkswagen AG does not guarantee or accept any liability with respect to the correctness of information in this document. Copyright by Volkswagen AG.
satelettronica

Output on the fault reader -V.A.G 1551- printer	Possible fault cause	Possible effects	Fault elimination
Implausible signal	♦ Needle lift sender -G80- defective ♦ Injection pipe to 3rd cylinder not OK. ♦ Shortage of fuel ♦ Air in fuel system		

Output on the fault reader -V.A.G 1551- printer	Possible fault cause	Possible effects	Fault elimination
00550 Injection commencement regulation Control difference	♦ Defective commencement of injection valve -N108- ♦ Needle lift sender -G80- defective ♦ Fuel tank empty ♦ Fuel supply not OK., lack of fuel ♦ Air in fuel system ♦ Start of delivery not OK.	♦ Engine runs rough ♦ Reduced performance ♦ Poor cold starting ♦ Increased exhaust emissions	– Check commencement of injection valve -N108- ⇒ page 17 , Final control diagnosis – Checking needle lift sender -G80- ⇒ page 82 – Fuel filter or fuel line blocked – Checking and adjusting commencement of injection ⇒ page 54

Output on the fault reader -V.A.G 1551- printer	Possible fault cause	Possible effects	Fault elimination
00625 Speed signal Implausible signal	♦ No signal from speedometer -G21- or speedometer sender -G22-	♦ Speedometer display not OK. ♦ Cruise control system switched off ♦ Vehicle jerks when changing gear ♦ Air conditioner is switched off	– Check signal from speedometer -G21- or speedometer sender -G22- ⇒ page 91
Signal too large			

Output on the fault reader -V.A.G 1551- printer	Possible fault cause	Possible effects	Fault elimination
00626			

Protected by copyright. Copyright by Volkswagen AG. Volkswagen AG does not guarantee or accept any liability with respect to the correctness of information in this document. Copying for private or commercial purposes, in part or in whole, is not permitted unless authorised by Volkswagen AG.
satelettronica

Output on the fault reader -V.A.G 1551- printer	Possible fault cause	Possible effects	Fault elimination
Glow period warning lamp -K29- Open circuit/short to earth	◆ Line open circuit ◆ Bulb defective	◆ Glow period warning lamp not functioning	– Check glow period warning lamp -K29- ⇒ Current flow diagrams, Electrical fault finding and Fitting locations
	◆ Short to earth	◆ Glow period warning lamp permanently on	
Short to positive	◆ Short to positive	◆ Glow period warning lamp not functioning	

Output on the fault reader -V.A.G 1551- printer	Possible fault cause	Possible effects	Fault elimination
00668 Vehicle voltage terminal 30 Signal too low	◆ Terminal 30 voltage supply relay -J317- defective	◆ Engine will not start ◆ Various running problems including engine will not start	– Check voltage supply for diesel direct injection system control unit -J248- ⇒ page 74
Implausible signal			
00671 Cruise control system (CCS) switch -E45- Undefined switch position	◆ Defective CCS switch -E45- ◆ Wiring open or short circuit	◆ Cruise control system switched off	– Check cruise control system ⇒ Current flow diagrams, Electrical fault finding and Fitting locations

Output on the fault reader -V.A.G 1551- printer	Possible fault cause	Possible effects	Fault elimination
00741 Brake pedal monitor Implausible signal	◆ Defective brake light switch -F- ◆ Defective brake pedal switch -F47-	◆ Glow period warning lamp flashes ◆ Brake light defective	– Check brake light switch -F- and brake pedal switch -F47- ⇒ page 69
00765 Modulating piston movement sender -G149-			

Protected by copyright. Copying for private or commercial purposes, in part or in whole, is not permitted unless authorised by Volkswagen AG. Volkswagen AG does not guarantee or accept any liability with respect to the correctness of information in this document. Copyright by Volkswagen AG.
satelettronica

Output on the fault reader -V.A.G 1551- printer	Possible fault cause	Possible effects	Fault elimination
	♦ Injection pump defective ♦ Wiring open or short circuit	♦ Glow period warning lamp flashes ♦ Various running problems ♦ Engine stops	– Checking modulating piston movement sender -G149- ⇒ page 77

Output on the fault reader -V.A.G 1551- printer	Possible fault cause	Possible effects	Fault elimination
00777 Accelerator position sender -G79- Implausible signal	♦ Defective accelerator position sender -G79- ♦ Accelerator position sender -G79- incorrectly adjusted	♦ Glow period warning lamp flashes ♦ Increased idling speed	– Check accelerator position sender -G79- ⇒ page 92 – Check accelerator position sender -G79- setting ⇒ page 47
Short to positive	♦ Defective accelerator position sender -G79- ♦ Wire has short to positive		
Voltage supply	♦ Wiring open or short circuit		

Output on the fault reader -V.A.G 1551- printer	Possible fault cause	Possible effects	Fault elimination
01044 Control unit incorrectly coded	♦ Invalid control unit coding		– Code control unit ⇒ page 96
01117 Load signal for alternator terminal DF Implausible signal	♦ Alternator -C- defective ♦ Voltage regulator defective ♦ Line open circuit	♦ Engine preheating not functioning	– Check alternator -C- ⇒ Current flow diagrams, Electrical fault finding and Fitting locations

Output on the fault reader -V.A.G 1551- printer	Possible fault cause	Possible effects	Fault elimination
01193			

Protected by copyright. Copying for private or commercial purposes, in part or in whole, is not permitted unless authorised by Volkswagen AG. Volkswagen AG does not guarantee or accept any liability with respect to the correctness of information in this document. Copyright by Volkswagen AG
satelettronica

Volkswagen AG. Volkswagen AG does not guarantee or accept any liability with respect to the correctness of information in this document. Copyright by Volkswagen AG. Protected by copyright. Commercial purposes, in part or in whole, are not permitted without the express authorisation of Volkswagen AG.

Output on the fault reader -V.A.G 1551- printer	Possible fault cause	Possible effects	Fault elimination
Low heat output relay -J359- Open circuit/short to earth	◆ Line open circuit ◆ Low heat output relay -J359- or high heat output relay -J360- defective	◆ Engine preheating not functioning	– Check low heat output relay -J359- or high heat output relay -J360- ⇒ page 17 , final control diagnosis
	◆ Short to earth	◆ Engine preheating remains on constantly	
Short to positive	◆ Short to positive	◆ Engine preheating not functioning	
01194 High heat output relay -J360- Short to positive	◆ Line open circuit ◆ Short to positive ◆ High heat output relay -J360- defective	◆ Engine preheating not functioning	– Checking high heat output relay -J360- ⇒ page 17 , Final control diagnosis

Output on the fault reader -V.A.G 1551- printer	Possible fault cause	Possible effects	Fault elimination
01208 Data set Modified	◆ Fault in data set ◆ Manipulated data set	◆ Vehicle loses type approval	– Renew diesel direct injection system control unit -J248- ⇒ page 96
01237 Fuel shut-off valve -N109- Mechanical fault	◆ Defective, leaking or blocked fuel shut-off valve -N109-	◆ Reduced performance ◆ Engine stops	– Check fuel shut-off valve -N109- ⇒ page 17 , Final control diagnosis
Open circuit/short to earth	◆ Defective fuel shut-off valve -N109- ◆ Wiring open circuit/ short to earth		

Output on the fault reader -V.A.G 1551- printer	Possible fault cause	Possible effects	Fault elimination
01242 Output stages in control unit			

satelettronica

Output on the fault reader -V.A.G 1551- printer	Possible fault cause	Possible effects	Fault elimination
Open circuit/short to positive	♦ All components activated by final control diagnosis	♦ Various running problems ♦ Engine stops	– Performing final control diagnosis ⇒ page 17 – Check wiring/connections to control elements – When wiring/connections are OK. then diesel direct injection system control unit -J248- is defective
Implausible signal	♦ Exhaust gas recirculation valve -N18- defective	♦ Increased exhaust emissions	

Output on the fault reader -V.A.G 1551- printer	Possible fault cause	Possible effects	Fault elimination
01265 Exhaust gas recirculation valve -N18- Open circuit/short to earth	♦ Line open circuit ♦ Exhaust gas recirculation valve defective	♦ No exhaust gas recirculation	– Check exhaust gas recirculation valve -N18- ⇒ page 17 , final control diagnosis
	♦ Short to earth	♦ Too much exhaust gas recirculation ♦ Reduced output, black smoke	
Short to positive	♦ Short to positive	♦ No exhaust gas recirculation	
01266 Glow plug relay -J52- Open circuit/short to earth	♦ Line open circuit ♦ Defective glow plug relay -J52-	♦ Glow plug system not working	– Check glow plug relay -J52- ⇒ page 17 , Final control diagnosis
	♦ Short to earth	♦ Glow plug system permanently on	
Short to positive	♦ Short to positive	♦ Glow plug system not working	

Output on the fault reader -V.A.G 1551- printer	Possible fault cause	Possible effects	Fault elimination
01268 Metering adjuster -N146-			

Copyright by Volkswagen AG. Volkswagen AG does not guarantee or accept any liability with respect to the correctness of information. Copying for private or commercial purposes, in part or in whole, is not permitted unless authorised by Volkswagen AG. Brands and copyright. Copyright by Volkswagen AG.
satelettronica

Output on the fault reader -V.A.G 1551- printer	Possible fault cause	Possible effects	Fault elimination
Control difference	◆ Injection pump defective ◆ Wiring open or short circuit	◆ Glow period warning lamp flashes ◆ Various running problems ◆ Engine stops	– Check metering adjuster -N146- ⇒ page 77
Lower stop value	◆ Quantity adjuster incorrectly set ◆ Quantity adjuster blocked by dirt	◆ Black smoke ◆ Rough idling	
Upper stop value	◆ Quantity adjuster incorrectly set ◆ Quantity adjuster blocked by dirt	◆ Juddering. Loss of power	

Output on the fault reader -V.A.G 1551- printer	Possible fault cause	Possible effects	Fault elimination
01269 Commencement of injection valve -N108- Open circuit/short to earth	◆ Line open circuit ◆ Defective commencement of injection valve -N108-	◆ Engine knocks when idling, because commencement of injection is constantly "advanced"	– Check commencement of injection valve -N108- ⇒ page 17 , Final control diagnosis
	◆ Short to earth	◆ Poor performance, because commencement of injection is constantly "retarded"	
Short to positive	◆ Short to positive	◆ Engine knocks when idling, because commencement of injection is constantly "advanced"	

Output on the fault reader -V.A.G 1551- printer	Possible fault cause	Possible effects	Fault elimination
17978			

Protected by copyright. Copying for private or commercial purposes, in part or in whole, is not permitted unless authorised by Volkswagen AG. Volkswagen AG does not guarantee or accept any liability with respect to the correctness of information in this document. Copyright by Volkswagen AG.
satelettronica

Output on the fault reader -V.A.G 1551- printer	Possible fault cause	Possible effects	Fault elimination
Engine control unit locked	♦ Attempted manipulation ♦ Short circuit in communication wire ♦ Fault in system for immobilizer ♦ Immobilizer control unit defective/missing ♦ Engine control unit renewed but has not been adapted to immobilizer.	♦ Engine starts briefly and then stops again ♦ Glow period warning lamp flashes	– Adapt engine control unit to electronic immobilizer ⇒ page 97 . – Checking electronic immobilizer: ⇒ Electrical system; Rep. Gr. 96 ; Assembly overview - immobilizer, vehicles > 09.00
65535 Diesel direct injection system control unit -J248- defective	♦ Control unit internally defective	♦ Various running problems ♦ Engine stops ♦ Glow period warning lamp flashes	– Renew diesel direct injection system control unit -J248- ⇒ page 96

2.3 Clear fault memory

Special tools and workshop equipment required

♦ Fault reader -V.A.G 1551- or vehicle system tester -V.A.G 1552- with diagnosis cable -V.A.G 1551/3-

Test prerequisite

• Fault eliminated

Note

After eliminating faults the fault memory must be interrogated again as follows and then erased.

Procedure

– Connect fault reader -V.A.G 1551- or vehicle system tester -V.A.G 1552- . Start engine and select “address word 01” of engine control unit. ((Connect fault reader -V.A.G 1551- and select engine control unit ⇒ page 2)

Indicated on display:

```
Rapid data transfer                HELP
Select function XX
```

– Press buttons 0 and 2 for function “Read fault memory” and confirm entry with Q button.

– Press → button until all faults still stored have been displayed and the display shows:

```
Rapid data transfer                HELP
Select function XX
```

– Press buttons 0 and 5 for “Clear fault memory” function and confirm entry with Q button.

Indicated on display:

```
Rapid data transfer                 ->
Fault memory is cleared!
```

Protected by copyright. Copyright by Volkswagen AG. Volkswagen AG does not guarantee or accept any liability with respect to the correctness of information in this document. Copyright by Volkswagen AG. Copying for private or commercial purposes, in part or in whole, is not permitted unless authorised by Volkswagen AG.
satelettronica

– If the fault memory will not erase there is a fault still in the system and this must be rectified.

– Press [→] button.

Indicated on display:

```
Rapid data transfer                    HELP
Select function XX
```

– Press buttons [0] and [6] for function “End data transfer” and confirm entry with [Q] button.

– Carry out a further road test. Then interrogate fault memory again. No further fault may be displayed.

Protected by copyright. Copying for private or commercial purposes, in part or in whole, is not permitted unless authorised by Volkswagen AG. Volkswagen AG does not guarantee or accept any liability with respect to the correctness of information in this document. Copyright by Volkswagen AG.

satelettronica

3 Final control diagnosis

3.1 Performing final control diagnosis

Special tools and workshop equipment required

- Fault reader -V.A.G 1551- or vehicle system tester -V.A.G 1552- with diagnosis cable -V.A.G 1551/3-

The final control diagnosis activates the following components in the stated sequence:

1. Commencement of injection valve -N108-
2. Exhaust gas recirculation valve -N18-
3. AC compressor shut-off function
4. Throttle valve positioner -V60-
5. Fuel shut-off valve -N109-
6. Glow plug relay -J52-
7. Glow period warning lamp -K29-

Vehicles with m-equipment only.

8. Low heat output relay -J359-
9. High heat output relay -J360-

Note

- *Activation of individual control elements is limited to 30 secs. but can be stopped at any time by pressing the ⇨ button.*
- *The ignition must be switched off before repeating the final control diagnosis.*

Procedure

– Connect fault reader -V.A.G 1551- or vehicle system tester -V.A.G 1552- . Start engine and select “Address word” 01 of engine control unit. ((Connect fault reader -V.A.G 1551- and select engine control unit ⇒ page 2)

Indicated on display:

```
Rapid data transfer                    HELP
Select function XX
```

– Operate fault reader -V.A.G 1551- taking into account the information on the display:

– Press buttons 0 and 3 for function “Final control diagnosis”.

Indicated on display:

```
Rapid data transfer                       Q
03-Final control diagno-
sis
```

– Confirm entry with Q button.

Indicated on display:

```
Final control diagnosis                  ->
Commencement of injection valve N108
```

Actuating the valve results in a significantly audible change in combustion noise (knocking).

If no change in combustion noise is heard:

– Checking injection timing control range ⇒ page 83

Protected by copyright. Copyright by Volkswagen AG. Volkswagen AG does not guarantee or accept any liability with respect to the correctness of information in this document. Copyright by Volkswagen AG. Protected by copyright. Copying for private or commercial purposes, in part or in whole, is not permitted unless authorised by Volkswagen AG.
satelettronica

– Press ⇨ button.

Indicated on display:

```
Final control diagnosis                    ->
Exhaust gas recirculation valve N18
```

The valve must click.

Note

- *The valve clicking cannot be heard because of engine noises and can therefore only be felt by touch.*
- *The piston movement of the mechanical exhaust gas recirculation valve -N18- is clearly visible at the side slot.*

If the valve does not click:

– Check exhaust gas recirculation valve -N18- ⇒ page 89 .

– Press ⇨ button.

Indicated on display:

```
Final control diagnosis                    ->
Conditioner compressor interrup-
tion
```

Air conditioner compressor switch-off is checked.

The test step is also recalled on vehicles without air conditioner system.

– Continue final control diagnosis.

– Press ⇨ button.

Indicated on display:

```
Final control diagnosis                    ->
Throttle valve positioner V60
```

The solenoid valve must click.

Note

The clicking of the valve is difficult to hear and is therefore best checked by touch.

If the valve does not click:

– Check throttle butterfly valve -N211- ⇒ page 87 .

– Press ⇨ button.

Indicated on display:

```
Final control diagnosis                    ->
Fuel shut-off valve N109
```

The engine must stop.

If the engine does not stop:

– Switch off ignition.

– Unscrew fuel shut-off valve -N109- and remove any metal particles or dirt.

– Repeat final control diagnosis. If the engine does not stop, renew fuel shut-off valve -N109- ⇒ Item 12 (page 43) .

– Continue final control diagnosis with engine stopped and ignition switched on.

– Press ⇨ button.

Protected by copyright. Copying for private or commercial purposes, in part or in whole, is not permitted unless authorised by Volkswagen AG. Volkswagen AG does not guarantee or accept any liability with respect to the correctness of information in this document. Copyright by Volkswagen AG.
satelettronica

Indicated on display:

```
Final control diagnosis                    ->
Glow plug relay J52
```

The relay must click.

Switching on and off the relay can also be observed as the interior light becomes brighter and darker as a result of the glow plug high power consumption.

If the relay does not click:

– Check glow plug relay -J52- : ⇒ Current flow diagrams, Electrical fault finding and Fitting locations

– Press [→] button.

Indicated on display:

```
Final control diagnosis                    ->
Glow period warning lamp K29
```

The warning lamp must flash.

If the warning lamp does not flash:

– Check glow period warning lamp -K29- : ⇒ Current flow diagrams, Electrical fault finding and Fitting locations

– Press [→] button.

Vehicles with m-equipment only.

Indicated on display:

```
Final control diagnosis                    ->
Low heat output relay J359
```

The relay must click.

If the relay does not click:

– Check low heat output relay -J359- : ⇒ Current flow diagrams, Electrical fault finding and Fitting locations

– Press [→] button.

Indicated on display:

```
Final control diagnosis                    ->
High heat output relay J360
```

The relay must click.

If the relay does not click:

– Check high heat output relay -J360- : ⇒ Current flow diagrams, Electrical fault finding and Fitting locations

– Press [→] button.

Indicated on display:

```
Rapid data transfer                      HELP
Select function XX
```

– Press buttons [0] and [6] for function “End data transfer” and confirm entry with [Q] button.

– Switch off ignition.

Protected by copyright. Copying for private or commercial purposes, in part or in whole, is not permitted unless authorised by Volkswagen AG. Volkswagen AG does not guarantee or accept any liability with respect to the correctness of information in this document. Copyright by Volkswagen AG.
satelettronica

Protected by copyright. Copying for private or commercial purposes, in part or in whole, is not permitted unless authorised by Volkswagen AG. Volkswagen AG does not guarantee or accept any liability with respect to the correctness of information in this document. Copyright by Volkswagen AG.

4 Measured value blocks

4.1 Safety precautions

Observe following if test and measuring instruments are required during a road test:

- ♦ Test and measuring instruments must be secured to rear seat and operated by a second person from this location.

If test and measuring instruments are operated from front passenger seat and the vehicle is involved in an accident, there is a possibility that the person sitting in this seat may receive serious injuries when the airbag is triggered.

4.2 Read measured value block

Special tools and workshop equipment required

- ♦ Fault reader -V.A.G 1551- or vehicle system tester -V.A.G 1552- with diagnosis cable -V.A.G 1551/3-

Test prerequisites

- Coolant temperature must be at least 80 °C.
- All electrical consumers such as e.g. rear window heating must be switched off.
- If the vehicle is equipped with an air conditioner, it must be switched off.
- No faults must be stored in fault memory ⇒ page 5 , interrogating fault memory.

Procedure

– Connect fault reader -V.A.G 1551- or vehicle system tester -V.A.G 1552- and select engine electronics control unit with “address word 01”. Engine must be idling. (Connecting fault reader -V.A.G 1551- and selecting engine electronics control unit ⇒ page 2).

Indicated on display:

```
Rapid data transfer                    HELP
Select function XX
```

– Press buttons 0 and 8 for function “Read measured value block” and confirm entry with Q button.

Indicated on display:

```
Read measured value block              HELP
Input display group number XXX
```

Note

The display group number 001 is an example to illustrate the sequence.

– Press buttons 0, 0 and 1 for “Display group number 1” and confirm entry with Q button.

Indicated on display: (1...4 = display zones)

```
Read measured value block 1            ->
        1          2          3          4
```

– Press → button.

Indicated on display:

```
Rapid data transfer                    HELP
Select function XX
```

satelettronica

– Press buttons [0] and [6] for function “End output” and confirm entry with [Q] button.

Note

To change to another display group proceed as follows:

Display group	Fault reader -V.A.G 1551-	Vehicle system tester -V.A.G 1552-
Higher	Press button 3	Press [↑] button
Lower	Press button 1	Press [↓] button
Skip	Press [C] button.	Press [C] button.

4.3 Evaluating measured value blocks, engine codes AHG, AKU

4.3.1 Display group 000 at idling speed (engine warm, coolant temperature not below 80°C)

Display group 000 (decimal displayed value)

- Engine running at idling speed

Read measured value block 0 → appears on display

x x x x x x x x x x

Display zone	Measured value	Specification
10	Display value without meaning	255
9	Fuel temperature	91…201
8	Intake air temperature Engine code AHG Engine code AKU	 51…182 138…190
7	Coolant temperature	80…35
6	Atmospheric pressure	Ignore
5	Display value without meaning	Ignore
4	Injection quantity Engine code AHG Engine code AKU	 11…35 11…45
3	Accelerator pedal position	0
2	Commencement of injection Engine code AHG Engine code AKU	 0…88 37…75
1	Engine speed	41…45

4.3.2 Display group 001 at idling speed (engine warm, coolant temperature not below 80°C)

Display group 001 -injected quantity-	
Read measured value block 1 → xxxx rpm xx.x mg/H x.xx V xxx.x °C	▸ appears on display

Protected by copyright. Copying for private or commercial purposes, in part or in whole, is not permitted unless authorised by Volkswagen AG. Volkswagen AG does not guarantee or accept any liability with respect to the correctness of information in this document. Copyright by Volkswagen AG.
satelettronica

1	2	3	4	▾ display zones	Specification	Evaluation
				Coolant temperature	80…110°C	---
			Voltage of modulating piston movement sender -G149- Engine code AHG Engine code AKU		1.50…2.00 V 1.50…2.10 V	⇒ page 22
		Injection quantity Engine code AHG Engine code AKU			2.2…7 mg/stroke 2.2…9 mg/stroke	⇒ page 22
	Engine speed				861…945 rpm	---

4.3.3 Evaluation: Injected quantity display

Display fault reader -V.A.G 1551-	Possible fault cause	Fault elimination
Below 2.2 mg/H	♦ Injection pump too rich	– Renew injection pump ⇒ page 49
Above 7 mg/H or 9 mg/H	♦ Engine too cold ♦ Injection pump too lean	– Run engine at increased speed to warm up and repeat test – Renew injection pump ⇒ page 49

4.3.4 Evaluation: Modulating piston movement sender -G149- voltage display

Display fault reader -V.A.G 1551-	Possible fault cause	Fault elimination
Below 1.50 V	♦ Injection pump too rich	– Renew injection pump ⇒ page 49
Above 2.00 V or 2.10 V	♦ Engine too cold ♦ Injection pump too lean	– Run engine at increased speed to warm up and repeat test – Renew injection pump ⇒ page 49

4.3.5 Display group 002 at idling speed (engine warm, coolant temperature not below 80 °C)

Display group 002 -idling speed-						
Read measured value block → 2 xxxx rpm xxx.x % xxx xxx.x °C				▾ appears on display		
1	2	3	4	▾ display zones	Specification	Evaluation
				Coolant temperature	80…110°C	---
			Operating condition		010	⇒ page 23
		Accelerator pedal position			0 %	⇒ page 23
	Engine speed				861…945 rpm	---

Protected by copyright. Copying for private or commercial purposes, in part or in whole, is not permitted unless authorised by Volkswagen AG. Volkswagen AG does not guarantee or accept any liability with respect to the correctness of information in this document. Copyright by Volkswagen AG.
satelettronica

4.3.6 Evaluation: Accelerator pedal position display

Display fault reader -V.A.G 1551-	Possible fault cause	Fault elimination
1…100 %	♦ Accelerator position sender -G79- incorrectly adjusted or defective	– Check accelerator position sender -G79- and adjust if necessary ⇒ page 47
	♦ Open circuit to accelerator position sender -G79-	

4.3.7 Evaluation: Operating condition display

Significance of figures in 3-digit number block for engine operating condition:

Significance if display = 1			
x	x	x	Engine operating condition
		1	Air conditioner compressor switched on
	1		Idling switch closed (accelerator position less than 17%)
1			Increased idling speed because air conditioner is switched on

4.3.8 Display group 003 at idling speed (engine warm, coolant temperature not below 80 °C)

Display group 003 -Exhaust gas recirculation-						
Read measured value block 3 →				▾ appears on display		
xxxx rpm	xxx mg/H	xxx mg/H	xxx %			
1	2	3	4	▾ display zones	Specification	Evaluation
				Duty cycle of exhaust gas recirculation valve -N18- Engine code AHG Engine code AKU	4…6 % 94…96 %	---
			No display			
		No display				
	Engine speed				861…945 rpm	---

4.3.9 Display group 004 at idling speed (engine warm, coolant temperature not below 80 °C)

Display group 004 -Commencement of injection-						
Read measured value block 4 →				▾ appears on display		
xxxx rpm	xx.x ° BTDC	xx.x ° BTDC	xxx %			
1	2	3	4	▾ display zones	Specification	Evaluation
				Duty cycle of commencement of injection valve -N108- Engine code AHG Engine code AKU	20…80 % 2…80 %	⇒ page 24

Copyright by Volkswagen AG. Volkswagen AG does not guarantee or accept any liability with respect to the correctness of information in this document. Copyright by Volkswagen AG. Reproduced by copyright Colourgraph Computer Publishing for commercial purposes, in part or in whole, is not permitted unless authorised by Volkswagen AG.
satelettronica

		Commencement of injection (actual) Engine code AHG Engine code AKU	0…6° BTDC 0…3° BTDC	⇒ page 24
		Commencement of injection (specification) Engine code AHG Engine code AKU	0…6° BTDC 0…3° BTDC	⇒ page 24
	Engine speed		861…945 rpm	---

4.3.10 Evaluation: Commencement of injection (specified) display

Display fault reader -V.A.G 1551-	Possible fault cause	Fault elimination
Over 3° BTDC or 6° BTDC	♦ Engine too cold	– Run engine at increased speed to warm up and repeat check.

4.3.11 Evaluation: Commencement of injection (actual) display

Display fault reader -V.A.G 1551-	Possible fault cause	Fault elimination
Over 3° BTDC or 6° BTDC	♦ Engine too cold	– Run engine at increased speed to warm up and repeat check.
	♦ Injection pump set too “advanced”	– Dynamically checking and adjusting commencement of injection ⇒ page 54
	♦ Defective commencement of injection valve -N108-	– Check commencement of injection valve -N108- ⇒ page 17 , Final control diagnosis
Under 0° BTDC	♦ Injection pump set extremely “retarded”	– Dynamically checking and adjusting commencement of injection ⇒ page 54
	♦ Injection timing device blocked	– Check commencement of injection valve -N108- ⇒ page 17 , Final control diagnosis
	♦ Defective commencement of injection valve -N108-	

4.3.12 Evaluation: Commencement of injection valve -N108- duty cycle display

Display fault reader -V.A.G 1551-	Possible fault cause	Fault elimination
Above 80%	♦ Injection pump set too “retarded”	– Dynamically checking and adjusting commencement of injection ⇒ page 54

4.3.13 Display group 006 with ignition switched on

Display group 006 -switch positions-						
Read measured value block → 6 xxx km/h	xxx	xxxxxx	xxx	▾ appears on display		
1	2	3	4	▾ display zones	Specification	Evaluation
				Cruise control system[6)]	---	---

satelettronica

		Cruise control system		⇒ page 25
		Brake pedal monitor		⇒ page 25
	Speed		---	---

6) 0 = Vehicles with cruise control system: 255 = Vehicles with no cruise control system.

4.3.14 Evaluation: Brake pedal monitor display

Significance of figures in 3-digit number block for brake pedal monitoring:

Significance if display = 1			
x	x	x	Brake pedal monitor
		1	Brake light switch -F- closed
	1		Brake pedal switch -F47- open
1			Clutch pedal switch -F36- open

4.3.15 Evaluation: Cruise control system display

Significance of figures in 6-digit number block for cruise control system:

Significance if display = 1						
x	x	x	x	x	x	Cruise control system
					1	Cruise control system switched on
				1		Cruise control and memory switched off
			1			Speed recording (SET/FIX button)
		1				Resume/acceleration
	1					Brake pedal operated
1						Clutch pedal operated

4.3.16 Display group 007 with ignition switched on (engine cold and not running)

Display group 007 -temperatures-						
Read measured value block 7 →				▾ appears on display		
xxx.x °C		xxx.x °C	xxx.x °C			
1	2	3	4	▾ display zones	Specification	Evaluation
				Coolant temperature	Approx. ambient temperature[7]	⇒ page 26
			Intake air temperature		Approx. ambient temperature[7]	⇒ page 26
		No display				
	Fuel temperature				Approx. ambient temperature[7]	⇒ page 26

7) Details of temperature specifications are not possible. When the engine is cold the fuel, intake air and coolant temperatures must equate approximately to am-

Protected by copyright. Copying for private or commercial purposes, in part or in whole, is not permitted unless authorised by Volkswagen AG. Volkswagen AG does not guarantee or accept any liability with respect to the correctness of information in this document. Copyright by Volkswagen AG.
satelettronica

bient temperature. If a temperature deviates noticeably, then the relevant sender must be checked.

4.3.17 Evaluation: Fuel temperature display

Display fault reader -V.A.G 1551-	Possible fault cause	Fault elimination
- 5.4 °C	♦ Short circuit or fuel temperature sender -G81- defective	– Check fuel temperature sender -G81- ⇒ page 75 – If a fault is present the measured value block indicates a fuel temperature of -5.4°C

4.3.18 Evaluation: Intake air temperature display

Display fault reader -V.A.G 1551-	Possible fault cause	Fault elimination
approx. 136.8 °C	♦ Intake air temperature sender -G42- defective	– Check intake air temperature sender -G42- ⇒ page 72 – If a fault is present the measured value block indicates a constant intake air temperature of approx.136.8°C

4.3.19 Evaluation: Coolant temperature display

Display fault reader -V.A.G 1551-	Possible fault cause	Fault elimination
Large deviation from ambient temperature	♦ Short circuit or coolant temperature sender -G62- defective	– Check coolant temperature sender -G62- ⇒ page 67 – If a fault is present the fuel temperature is displayed as a substitute

4.3.20 Display group 013 at idling speed (engine warm, coolant temperature not below 80 °C)

4.3.21 Engine code AHG

Display group 013 -idling speed smooth running control-						
Read measured value block 13 →				▾ appears on display		
x.xx mg/H	x.xx mg/H	x.xx mg/H				
1	2	3	4	▾ display zones	Specification	Evaluation
				No display		---
			Deviating injection quantity between cyl. 1 and cyl. 3		- 2.0…+ 2.0 mg/stroke	⇒ page 27
		Deviating injection quantity between cyl. 2 and cyl. 3			- 2.0…+ 2.0 mg/stroke	⇒ page 27
	Deviating injection quantity between cyl. 4 and cyl. 3				- 2.0…+ 2.0 mg/stroke	⇒ page 27

Protected by copyright. Copying for private or commercial purposes, in part or in whole, is not permitted unless authorised by Volkswagen AG. Volkswagen AG does not guarantee or accept any liability with respect to the correctness of information in this document. Copyright by Volkswagen AG.
satelettronica

4.3.22 Evaluation: Idling speed smooth running control display

- The injection system is equipped with an idling speed smooth running control. There may be power differences between the individual cylinders (component tolerances, jet drillings, compressions etc.) which are recognised and equalized via selective injected quantities.
- Recognition is carried out at idling speed via the signal from the engine speed sender, which delivers four signals per crankshaft revolution to the control unit. If the signals are delivered at the same rhythm then all cylinders work the same. If one cylinder is weaker then the crankshaft takes longer for the next half revolution. Conversely, a more powerful cylinder accelerates the crankshaft so less time is taken.
- If the control unit recognises a difference, then the relevant cylinder is given more or less fuel, until the engine runs “evenly” again.
- The measured value block shows the injection quantity deviation between the individual cylinders and No. 3 cylinder. This is necessary to achieve an even engine idling speed.
- +...mg/stroke: The relevant cylinder is less powerful than No. 3 cylinder and is therefore supplied with more fuel.
- ...mg/stroke: The relevant cylinder is more powerful than No. 3 cylinder and is therefore supplied with less fuel.

4.3.23 Engine code AKU

Display group 013 -idling speed smooth running control-						
Read measured value block 13 →				▾ appears on display		
x.xx mg/H	x.xx mg/H	x.xx mg/H	x.xx mg/H			
1	2	3	4	▾ display zones	Specification	Evaluation
				Cyl. 4 smooth running control injected quantity	- 2.0…+ 2.0 mg/stroke	⇒ page 27
			Cyl. 3 smooth running control injected quantity		- 2.0…+ 2.0 mg/stroke	⇒ page 27
		Cyl. 2 smooth running control injected quantity			- 2.0…+ 2.0 mg/stroke	⇒ page 27
	Cyl. 1 smooth running control injected quantity				- 2.0…+ 2.0 mg/stroke	⇒ page 27

4.3.24 Evaluation: Idling speed smooth running control display

- The injection system is equipped with an idling speed smooth running control. There may be power differences between the individual cylinders (component tolerances, jet drillings, compressions etc.) which are recognised and equalized via selective injected quantities.
- Recognition is carried out at idling speed via the signal from the engine speed sender, which delivers four signals per crankshaft revolution to the control unit. If the signals are delivered at the same rhythm then all cylinders work the same. If one cylinder is weaker then the crankshaft takes longer for the next half revolution. Conversely, a more powerful cylinder accelerates the crankshaft so less time is taken.

satelettronica

- If the control unit recognises a difference, then the relevant cylinder is given more or less fuel, until the engine runs “evenly” again.
- +...mg/stroke: The respective cylinder is less powerful and is therefore supplied with more fuel.
- -...mg/stroke: The respective cylinder is more powerful and is therefore supplied with less fuel.

4.3.25 Display group 000 at full throttle (road test in 3rd gear, coolant temperature not below 80 °C)

Note

- *When testing, accelerate the vehicle at full throttle.*
- *The measured values must be printed out or read (2nd person required) when the revolutions reach 3000 rpm.*

Display group 000 (decimal displayed value)											
• Engine speed 2800...3200 rpm											
Read measured value block 0										▾ appears on display	
x	x	x	x	x	x	x	x	x	x		
1	2	3	4	5	6	7	8	9	10	▾ display zones	Specification
										Display value without meaning	254…255
										Fuel temperature	90…201
										Intake air temperature Engine code AHG Engine code AKU	80…180 138…190
										Coolant temperature	80…35
										Atmospheric pressure	Ignore
										Display value without meaning	Ignore
										Injection quantity Engine code AHG Engine code AKU	108…120 100…120
										Accelerator pedal position	255
										Commencement of injection Engine code AHG Engine code AKU	130…190 113…150
										Engine speed	133…153

satelettronica
Protected by copyright. Copying for private or commercial purposes, in part or in whole, is not permitted unless authorised by Volkswagen AG. Volkswagen AG does not guarantee or accept any liability with respect to the correctness of information in this document. Copyright by Volkswagen AG.

4.3.26 Display group 004 at full throttle (road test in 3rd gear, coolant temperature not below 80 °C)

Note

- *When testing, accelerate the vehicle at full throttle.*
- *The measured values must be printed out or read (2nd person required) when the revolutions reach 3000 rpm.*

Display group 004 -Commencement of injection-						
Read measured value block → 4				▾ appears on display		
xxxx rpm	xx.x ° BTDC	xx.x ° BTDC	xxx %			
1	2	3	4	▾ display zones	Specification	Evaluation
				Duty cycle of commencement of injection valve -N108-	70…95 %	⇒ page 29
			Commencement of injection (actual)		Approx. commencement of inj. (specified)	⇒ page 29
		Commencement of injection (specification) Engine code AHG Engine code AKU			6…12° CA BTDC 6…9° CA BTDC	---
	Engine speed				2800…3200 rpm	---

4.3.27 Evaluation: Commencement of injection (actual) display

Display fault reader -V.A.G 1551-	Possible fault cause	Fault elimination
For excessive deviation from specified value (CA approx. 5°)	♦ Defective commencement of injection valve -N108-	– Check commencement of injection valve -N108- ⇒ page 17 , Final control diagnosis
	♦ Injection pump timing way off	– Dynamically checking and adjusting commencement of injection ⇒ page 54
	♦ Air in fuel system	– Check fuel supply system

4.3.28 Evaluation: Commencement of injection valve -N108- duty cycle display

Display fault reader -V.A.G 1551-	Possible fault cause	Fault elimination
Below 70 or above 95%	♦ Defective commencement of injection valve -N108-	– Check commencement of injection valve -N108- ⇒ page 17 , Final control diagnosis
		– Dynamically checking and adjusting commencement of injection ⇒ page 54
		– Check fuel supply system

Protected by copyright. Copying for private or commercial purposes, in part or in whole, is not permitted unless authorised by Volkswagen AG. Volkswagen AG does not guarantee or accept any liability with respect to the correctness of information in this document. Copyright by Volkswagen AG.
satelettronica

4.3.29 Display group 008 at full throttle (road test in 3rd gear, coolant temperature not below 80 °C)

Note

- *When testing, accelerate the vehicle at full throttle.*
- *The measured values must be printed out or read (2nd person required) when the revolutions reach 3000 rpm.*

Display group 008 -quantity injected limitation-						
Read measured value block → 8				▾ appears on display		
xxxx rpm	xx.x mg/H	xx.x mg/H	xx.x mg/H			
1	2	3	4	▾ display zones	Specification	Evaluation
				Injected quantity limitation (opacity map) Engine code AHG Engine code AKU	21…25 mg/stroke 20…25 mg/stroke	⇒ page 30
				Injected quantity limitation (torque map) Engine code AHG Engine code AKU	22…24 mg/stroke 23…24 mg/stroke	⇒ page 30
				Quantity injected (driver's requirements)	38…44 mg/stroke	⇒ page 30
				Engine speed	2800…3200 rpm	---

4.3.30 Evaluation: Injected quantity (driver's requirement) display

Display fault reader -V.A.G 1551-	Possible fault cause	Fault elimination
Below 38 mg/H	♦ No full throttle	– Repeat test at full throttle.
	♦ Accelerator position sender -G79- incorrectly adjusted or defective	– Check accelerator position sender -G79- and adjust if necessary ⇒ page 47

4.3.31 Evaluation: Injected quantity limitation (torque map) display

Display fault reader -V.A.G 1551-	Possible fault cause	Fault elimination
Below 22 mg/H or 23 mg/H	♦ Speed too high or too low	– Read specification at 3000 rpm.

4.3.32 Evaluation: Injected quantity limitation (smoke map) display

Display fault reader -V.A.G 1551-	Possible fault cause	Fault elimination
Below 21 mg/H or 20 mg/H	♦ Atmospheric pressure sensor in control unit defective	– Renew diesel direct injection system control unit -J248- ⇒ page 96
	♦ Intake air temperature sender -G42- defective	– Check intake air temperature sender -G42- ⇒ page 72

Protected by copyright. Copying for private and commercial purposes, in part or in whole, is not permitted unless authorised by Volkswagen AG. Volkswagen AG does not guarantee or accept any liability with respect to the correctness of information in this document. Copyright by Volkswagen AG.

satelettronica

4.3.33 Display group 011 at full throttle (road test in 3rd gear, coolant temperature not below 80 °C)

Note

- *When testing, accelerate the vehicle at full throttle.*
- *The measured values must be printed out or read (2nd person required) when the revolutions reach 3000 rpm.*

Display group 011 -charge pressure control-						
Read measured value block → 11				▾ appears on display		
xxxx rpm	xxxx mbr	xxxx mbr	xxx %			
1	2	3	4	▾ display zones	Specification	Evaluation
				Duty cycle of throttle valve positioner	4…6 %	---
			No display			
		No display				
	Engine speed				2800…3200 rpm	---

4.4 Evaluating measured value blocks, engine code AGD

4.4.1 Display group 000 at idling speed (engine warm, coolant temperature not below 80°C)

Display group 000 (decimal displayed value)											
• Engine running at idling speed											
Read measured value block 0										▾ appears on display	
x	x	x	x	x	x	x	x	x	x		
1	2	3	4	5	6	7	8	9	10	▾ display zones	Specification
										Display value without meaning	255
									Fuel temperature		91…201
								Intake air temperature with 68-pin control unit with 80-pin control unit			50…182 138…190
							Coolant temperature				80…35
						Atmospheric pressure					Ignore
					Display value without meaning						Ignore
				Quantity injected							11…45
			Accelerator pedal position								0
		Commencement of injection with 68-pin control unit with 80-pin control unit									0…88 37…75

satelettronica

Display group 000 (decimal displayed value)	
Engine speed	41…45

4.4.2 Display group 001 at idling speed (engine warm, coolant temperature not below 80°C)

Display group 001 -injected quantity-						
Read measured value block 1 →				▾ appears on display		
xxxx rpm	xx.x mg/H	x.xx V	xxx.x °C			
1	2	3	4	▾ display zones	Specification	Evaluation
				Coolant temperature	80…110°C	---
			Voltage from modulating piston movement sender -G149-		1.40…1.80 V	⇒ page 32
		Quantity injected			2.2…9 mg/stroke	⇒ page 32
	Engine speed				861…945 rpm	---

4.4.3 Evaluation: Injected quantity display

Display fault reader -V.A.G 1551-	Possible fault cause	Fault elimination
Below 2.2 mg/H	♦ Injection pump too rich	– Renew injection pump ⇒ page 49
Above 9 mg/stroke	♦ Engine too cold ♦ Injection pump too lean	– Run engine at increased speed to warm up and repeat test – Renew injection pump ⇒ page 49

4.4.4 Evaluation: Modulating piston movement sender -G149- voltage display

Display fault reader -V.A.G 1551-	Possible fault cause	Fault elimination
Below 1.40 V	♦ Injection pump too rich	– Renew injection pump ⇒ page 49
Over 1.80 V	♦ Engine too cold ♦ Injection pump too lean	– Run engine at increased speed to warm up and repeat test – Renew injection pump ⇒ page 49

4.4.5 Display group 002 at idling speed (engine warm, coolant temperature not below 80 °C)

Display group 002 -idling speed-						
Read measured value block 2 →				▾ appears on display		
xxxx rpm	xxx.x %	xxx	xxx.x °C			
1	2	3	4	▾ display zones	Specification	Evaluation
				Coolant temperature	80…110°C	---
			Operating condition		010	⇒ page 33

Copyright by Volkswagen AG. Volkswagen AG does not guarantee or accept any liability with respect to the correctness of information in this document. Copyright by Volkswagen AG. Transmitted or reproduced in whole, in part, in any form or by any means without the express permission of Volkswagen AG is forbidden. Copyright by Volkswagen AG. For private or commercial purposes, in part or in whole, is not permitted unless authorised by Volkswagen AG.

satelettronica

	Accelerator pedal position	0 %	⇒ page 33
	Engine speed	861…945 rpm	---

4.4.6 Evaluation: Accelerator pedal position display

Display fault reader -V.A.G 1551-	Possible fault cause	Fault elimination
1…100 %	♦ Accelerator position sender -G79- incorrectly adjusted or defective	– Check accelerator position sender -G79- and adjust if necessary ⇒ page 47
	♦ Open circuit to accelerator position sender -G79-	

4.4.7 Evaluation: Operating condition display

Significance of figures in 3-digit number block for engine operating condition:

Significance if display = 1			
x	x	x	Engine operating condition
		1	Air conditioner compressor switched on
	1		Idling switch closed (accelerator position less than 17%)
1			Increased idling speed because air conditioner is switched on

4.4.8 Display group 003 at idling speed (engine warm, coolant temperature not below 80 °C)

Display group 003 -Exhaust gas recirculation-						
Read measured value block 3 →				▾ appears on display		
xxxx rpm	xxx mg/H	xxx mg/H	xxx %			
1	2	3	4	▾ display zones	Specification	Evaluation
				Duty cycle of exhaust gas recirculation valve -N18-	4…6 %	---
			No display			
		No display				
	Engine speed				861…945 rpm	---

4.4.9 Display group 004 at idling speed (engine warm, coolant temperature not below 80 °C)

Display group 004 -Commencement of injection-						
Read measured value block 4 →				▾ appears on display		
xxxx rpm	xx.x ° BTDC	xx.x ° BTDC	xxx %			
1	2	3	4	▾ display zones	Specification	Evaluation
				Duty cycle of commencement of injection valve -N108-	2…80 %	⇒ page 34

Protected by copyright. Copying for private or commercial purposes, in part or in whole, is not permitted unless authorised by Volkswagen AG. Volkswagen AG does not guarantee or accept any liability with respect to the correctness of information in this document. Copyright by Volkswagen AG.
satelettronica

		Commencement of injection (actual) with 68-pin control unit with 80-pin control unit	0…5° BTDC 0…3° BTDC	⇒ page 34
		Commencement of injection (specification) with 68-pin control unit with 80-pin control unit	0…5° BTDC 0…3° BTDC	⇒ page 34
	Engine speed		861…945 rpm	---

Protected by copyright. Copying for private or commercial purposes, in part or in whole, is not permitted unless authorised by Volkswagen AG. Volkswagen AG does not guarantee or accept any liability with respect to the correctness of information in this document. Copyright by Volkswagen AG.

4.4.10 Evaluation: Commencement of injection (specified) display

Display fault reader -V.A.G 1551-	Possible fault cause	Fault elimination
Over 3° or 5° BTDC	♦ Engine too cold	– Run engine at increased speed to warm up and repeat check.

4.4.11 Evaluation: Commencement of injection (actual) display

Display fault reader -V.A.G 1551-	Possible fault cause	Fault elimination
Over 3° or 5° BTDC	♦ Engine too cold	– Run engine at increased speed to warm up and repeat check.
	♦ Injection pump set too “advanced”	– Dynamically checking and adjusting commencement of injection ⇒ page 54
	♦ Defective commencement of injection valve -N108-	– Check commencement of injection valve -N108- ⇒ page 17, Final control diagnosis
Under 0° BTDC	♦ Injection pump set extremely “retarded”	– Dynamically checking and adjusting commencement of injection ⇒ page 54
	♦ Injection timing device blocked	– Check commencement of injection valve -N108- ⇒ page 17 , Final control diagnosis
	♦ Defective commencement of injection valve -N108-	

4.4.12 Evaluation: Commencement of injection valve duty cycle display

Display fault reader -V.A.G 1551-	Possible fault cause	Fault elimination
Above 80%	♦ Injection pump set too “retarded”	– Dynamically checking and adjusting commencement of injection ⇒ page 54

4.4.13 Display group 006 with ignition switched on

Display group 006 -switch positions-						
Read measured value block 6 →				▾ appears on display		
xxx km/h	xxx	xxxxxx	xxx			
1	2	3	4	▾ display zones	Specification	Evaluation
				Cruise control system[8)]	---	---

satelettronica

		Cruise control system		⇒ page 35
		Brake pedal monitor		⇒ page 35
	Speed		---	---

8) 0 = Vehicles with cruise control system: 255 = Vehicles with no cruise control system.

4.4.14 Evaluation: Brake pedal monitor display

Significance of figures in 3-digit number block for brake pedal monitoring:

Significance if display = 1			
x	x	x	Brake pedal monitor
		1	Brake light switch -F- closed
	1		Brake pedal switch -F47- open
1			Clutch pedal switch -F36- open

4.4.15 Evaluation: Cruise control system display

Significance of figures in 6-digit number block for cruise control system:

Significance if display = 1						
x	x	x	x	x	x	Cruise control system
					1	Cruise control system switched on
				1		Cruise control and memory switched off
			1			Speed recording (SET/FIX button)
		1				Resume/acceleration
	1					Brake pedal operated
1						Clutch pedal operated

4.4.16 Display group 007 with ignition switched on (engine cold and not running)

Display group 007 -temperatures-						
Read measured value block → 7 xxx.x °C xxx.x °C xxx.x °C				▾ appears on display		
1	2	3	4	▾ display zones	Specification	Evaluation
				Coolant temperature	Approx. ambient temperature[9]	⇒ page 36
			Intake air temperature		Approx. ambient temperature[9]	⇒ page 36
		No display				
	Fuel temperature				Approx. ambient temperature[9]	⇒ page 36

9) Details of temperature specifications are not possible. When the engine is cold the fuel, intake air and coolant temperatures must equate approximately to am-

Protected by copyright. Copying for private or commercial purposes, in part or in whole, is not permitted unless authorised by Volkswagen AG. Volkswagen AG does not guarantee or accept any liability with respect to the correctness of information in this document. Copyright by Volkswagen AG.
satelettronica

bient temperature. If a temperature deviates noticeably, then the relevant sender must be checked.

4.4.17 Evaluation: Fuel temperature display

Display fault reader -V.A.G 1551-	Possible fault cause	Fault elimination
- 5.4 °C	♦ Short circuit or fuel temperature sender -G81- defective	– Check fuel temperature sender -G81- ⇒ page 75 – If a fault is present the measured value block indicates a fuel temperature of -5.4°C

4.4.18 Evaluation: Intake air temperature display

Display fault reader -V.A.G 1551-	Possible fault cause	Fault elimination
approx. 136.8 °C	♦ Intake air temperature sender -G42- defective	– Check intake air temperature sender -G42- ⇒ page 72 – If a fault is present the measured value block indicates a constant intake air temperature of approx.136.8°C

4.4.19 Evaluation: Coolant temperature display

Display fault reader -V.A.G 1551-	Possible fault cause	Fault elimination
Large deviation from ambient temperature	♦ Short circuit or coolant temperature sender -G62- defective	– Check coolant temperature sender -G62- ⇒ page 67 – If a fault is present the fuel temperature is displayed as a substitute

4.4.20 Display group 013 at idling speed (engine warm, coolant temperature not below 80 °C)

Display group 013 -idling speed smooth running control-						
Read measured value block 13 →				▾ appears on display		
x.xx mg/H	x.xx mg/H	x.xx mg/H				
1	2	3	4	▾ display zones	Specification	Evaluation
				No display		---
			Deviating injection quantity between cyl. 1 and cyl. 3		- 2.0…+ 2.0 mg/stroke	⇒ page 37
		Deviating injection quantity between cyl. 2 and cyl. 3			- 2.0…+ 2.0 mg/stroke	⇒ page 37
	Deviating injection quantity between cyl. 4 and cyl. 3				- 2.0…+ 2.0 mg/stroke	⇒ page 37

satelettronica
Protected by copyright. Copying for private or commercial purposes, in part or in whole, is not permitted unless authorised by Volkswagen AG. Volkswagen AG does not guarantee or accept any liability with respect to the correctness of information in this document. Copyright by Volkswagen AG.

4.4.21 Evaluation: Idling speed smooth running control display

- The injection system is equipped with an idling speed smooth running control. There may be power differences between the individual cylinders (component tolerances, jet drillings, compressions etc.) which are recognised and equalized via selective injected quantities.
- Recognition at idling speed is carried out via the signal from the engine speed sender -G28- , which delivers four signals per crankshaft revolution to the control unit. If the signals are delivered at the same rhythm then all cylinders work the same. If one cylinder is weaker then the crankshaft takes longer for the next half revolution. Conversely, a more powerful cylinder accelerates the crankshaft so less time is taken.
- If the control unit recognises a difference, then the relevant cylinder is given more or less fuel, until the engine runs “evenly” again.
- The measured value block shows the injection quantity deviation between the individual cylinders and No. 3 cylinder. This is necessary to achieve an even engine idling speed.
- +...mg/stroke: The relevant cylinder is less powerful than No. 3 cylinder and is therefore supplied with more fuel.
- -...mg/stroke: The relevant cylinder is more powerful than No. 3 cylinder and is therefore supplied with less fuel.

4.4.22 Display group 000 at full throttle (road test in 3rd gear, coolant temperature not below 80°C)

Note

- *When testing, accelerate the vehicle at full throttle.*
- *The measured values must be printed out or read (2nd person required) when the revolutions reach 3000 rpm.*

Display group 000 (decimal displayed value)		
• Engine speed 2850...3150 rpm		
Read measured value block 0 x x x x x x x x x x 1 2 3 4 5 6 7 8 9 10	▾ appears on display ▾ display zones	Specification
	Display value without meaning	255
	Fuel temperature	91…201
	Intake air temperature with 68-pin control unit with 80-pin control unit	50…182 138…190
	Coolant temperature	80…35
	Atmospheric pressure	Ignore
	Display value without meaning	Ignore
	Quantity injected with 68-pin control unit with 80-pin control unit	116…123 110…125
	Accelerator pedal position	255
	Commencement of injection	113…188

Volkswagen AG. Volkswagen AG does not guarantee or accept any liability with respect to the correctness of information in this document. Copyright by Volkswagen AG.
Protected by copyright. Copying for private or commercial purposes, in part or in whole, is not permitted unless authorised by Volkswagen AG.
satelettronica

Display group 000 (decimal displayed value)	
Commencement of injection with 68-pin control unit with 80-pin control unit	113…188 100…150
Engine speed	140…150

4.4.23 Display group 004 at full throttle (road test in 3rd gear, coolant temperature not below 80 °C)

Note

- *When testing, accelerate the vehicle at full throttle.*
- *The measured values must be printed out or read (2nd person required) when the revolutions reach 3000 rpm.*

Display group 004 -Commencement of injection-						
Read measured value block 4 →				▾ appears on display		
xxxx rpm	xx.x ° BTDC	xx.x ° BTDC	xxx %	▾ display zones	Specification	Evaluation
1	2	3	4	Duty cycle of commencement of injection valve -N108- with 68-pin control unit with 80-pin control unit	2…80 % 60…95 %	⇒ page 38
			Commencement of injection (actual)		Approx. commencement of inj. (specified)	⇒ page 38
		Commencement of injection (specification) with 68-pin control unit with 80-pin control unit			6…12° CA BTDC 5…9° CA BTDC	---
	Engine speed				2850…3150 rpm	---

4.4.24 Evaluation: Commencement of injection (actual) display

Display fault reader -V.A.G 1551-	Possible fault cause	Fault elimination
For excessive deviation from specified value (CA approx. 5°)	♦ Defective commencement of injection valve -N108-	– Check commencement of injection valve -N108- ⇒ page 17 , Final control diagnosis
	♦ Injection pump timing way off	– Dynamically checking and adjusting commencement of injection ⇒ page 54
	♦ Air in fuel system	– Check fuel supply system

Protected by copyright. Copying for private or commercial purposes, in part or in whole, is not permitted unless authorised by Volkswagen AG. Volkswagen AG does not guarantee or accept any liability with respect to the correctness of information in this document. Copyright by Volkswagen AG.

satelettronica

4.4.25 Evaluation: Commencement of injection valve duty cycle display

Display fault reader -V.A.G 1551-	Possible fault cause	Fault elimination
Below 2 or 60% or above 80 or 95%	♦ Defective commencement of injection valve -N108-	– Check commencement of injection valve -N108- ⇒ page 17 , Final control diagnosis
		– Dynamically checking and adjusting commencement of injection ⇒ page 54
		– Check fuel supply system

4.4.26 Display group 008 at full throttle (road test in 3rd gear, coolant temperature not below 80 °C)

Note

- *When testing, accelerate the vehicle at full throttle.*
- *The measured values must be printed out or read (2nd person required) when the revolutions reach 3000 rpm.*

Display group 008 -quantity injected limitation-						
Read measured value block 8 →				▾ appears on display		
xxxx rpm	xx.x mg/H	xx.x mg/H	xx.x mg/H			
1	2	3	4	▾ display zones	Specification	Evaluation
				Injected quantity limitation (smoke map) with 68-pin control unit with 80-pin control unit	20…26 mg/stroke 22…26 mg/stroke	⇒ page 39
				Injected quantity limitation (torque map)	24…25 mg/stroke	⇒ page 39
				Injected quantity (driver command) with 68-pin control unit with 80-pin control unit	23.2…24.6 mg/stroke 40…43 mg/stroke	⇒ page 39
				Engine speed	2850…3150 rpm	---

4.4.27 Evaluation: Injected quantity (driver's requirement) display

Display fault reader -V.A.G 1551-	Possible fault cause	Fault elimination
Below 23.2 or 40 mg/stroke	♦ No full throttle	– Repeat test at full throttle.
	♦ Accelerator position sender -G79- incorrectly adjusted or defective	– Check accelerator position sender -G79- and adjust if necessary ⇒ page 47

Copyright by Volkswagen AG. Volkswagen AG does not guarantee or accept any liability with respect to the correctness of information in this document. Copyright by Volkswagen AG. Copying for private or commercial purposes, in part or in whole, is not permitted unless authorised by Volkswagen AG.
satelettronica

4.4.28 Evaluation: Injected quantity limitation (torque map) display

Display fault reader -V.A.G 1551-	Possible fault cause	Fault elimination
Below 24 mg/H	♦ Speed too high or too low	– Read specification at 3000 rpm.

4.4.29 Evaluation: Injected quantity limitation (smoke map) display

Display fault reader -V.A.G 1551-	Possible fault cause	Fault elimination
Below 20 or 22 mg/ stroke	♦ Atmospheric pressure sensor in control unit defective	– Renew diesel direct injection system control unit -J248- ⇒ page 96
	♦ Intake air temperature sender -G42- defective	– Check intake air temperature sender -G42- ⇒ page 72

4.4.30 Display group 011 at full throttle (road test in 3rd gear, coolant temperature not below 80 °C)

Note

- *When testing, accelerate the vehicle at full throttle.*
- *The measured values must be printed out or read (2nd person required) when the revolutions reach 3000 rpm.*

Display group 011 -charge pressure control-						
Read measured value block 11 →				▾ appears on display		
xxxx rpm	xxxx mbr	xxxx mbr	xxx %			
1	2	3	4	▾ display zones	Specification	Evaluation
				Duty cycle of throttle valve positioner	4…6 %	---
			No display			
		No display				
	Engine speed				2850…3150 rpm	---

Protected by copyright. Copyright by Volkswagen AG. Volkswagen AG does not guarantee or accept any liability with respect to the correctness of information in this document. Copyright by Volkswagen AG. Copying, in whole or in part, for commercial purposes, is not permitted unless authorised by Volkswagen AG.
satelettronica

23 – Mixture preparation - injection

1 Repairing diesel direct injection system

The diesel fuel is sucked out of the tank by the distributor-type injection pump, compressed and injected directly onto the piston crown in the combustion chamber via injectors.

The quantity injected is electronically regulated by the diesel direct injection system control unit -J248- . Electronic regulation enables the quantity injected and the injection characteristics, commencement of injection and exhaust gas recirculation to be regulated flexibly according to requirements.

The diesel direct injection system control unit -J248- is equipped with a fault memory. Before starting repairs, adjustments and fault finding, the fault memory must be interrogated and final control diagnosis completed ⇒ page 5 .

Note

When performing test and adjustment work the control unit can recognize and store faults. For this reason after completing all test and adjustment work always clear fault memory *⇒ page 15* *.*

1.1 Safety precautions

To prevent injuries to persons and/or damage to the injection and glow plug system, the following must be noted:

- The ignition must be switched off before connecting or disconnecting injection or glow plug system wiring or tester cables.
- If the engine is to be turned at starter speed, without starting, e.g. when checking compression, pull connector from fuel shut-off valve -N109- on injection pump.
- Before disconnecting battery, obtain radio code for radios with anti-theft coding.
- Disconnecting and connecting the battery must only be carried out with the ignition switched off, as the diesel direct injection system control unit -J248- may otherwise be damaged.

Observe following if test and measuring instruments are required during a road test:

- Test and measuring instruments must be secured to rear seat and operated by a second person from this location.

If test and measuring instruments are operated from front passenger seat and the vehicle is involved in an accident, there is a possibility that the person sitting in this seat may receive serious injuries when the airbag is triggered.

1.2 Rules for cleanliness

When working on the fuel supply and injection systems, pay careful attention to the following “5 rules” for cleanliness:

- Thoroughly clean all unions and adjacent areas before disconnecting.
- Place removed parts on a clean surface and cover. Do not use fluffy cloths!

Protected copyright. Copyright by Volkswagen AG. Copying for private or commercial purposes, in part or in whole, is not permitted unless authorised by Volkswagen AG. Volkswagen AG does not guarantee or accept any liability with respect to the correctness of information in this document.
satelettronica

- Carefully cover opened components or seal if repairs cannot be carried out immediately.
- Install clean components only: do not remove replacement parts from packing until immediately before installing. Do not use parts that have not been stored in their packing (e.g. in tool boxes etc.).
- When system is open: do not work with compressed air if this can be avoided. Do not move vehicle unless absolutely necessary.
- Also ensure that no diesel fuel comes into contact with the coolant hoses. If necessary, the hoses must be cleaned immediately. Damaged hoses must be renewed.

1.3 Fitting locations overview

Components A to E are not shown in the exploded illustrations.

A - Brake pedal switch -F47- or brake light switch -F-

- ❑ Together in one housing, on brake pedal in footwell ⇒ page 46 .
- ❑ Checking ⇒ page 69 .

B - Accelerator position sender -G79-

- ❑ In footwell next to accelerator pedal ⇒ page 46

C - Clutch pedal switch -F36-

- ❑ In footwell ⇒ page 46 .
- ❑ Checking ⇒ page 70 .

1 - Throttle valve housing

- ❑ With control flap and throttle butterfly valve -N211- .
- ❑ Renew complete only
- ❑ Displayed as throttle valve positioner -V60- during final control diagnosis.
- ❑ Removing, installing and testing ⇒ page 48 .

2 - Diesel direct injection system control unit -J248-

3 - Intake air temperature sender -G42-

- ❑ Displayed as intake manifold temperature sender -G72- in fault

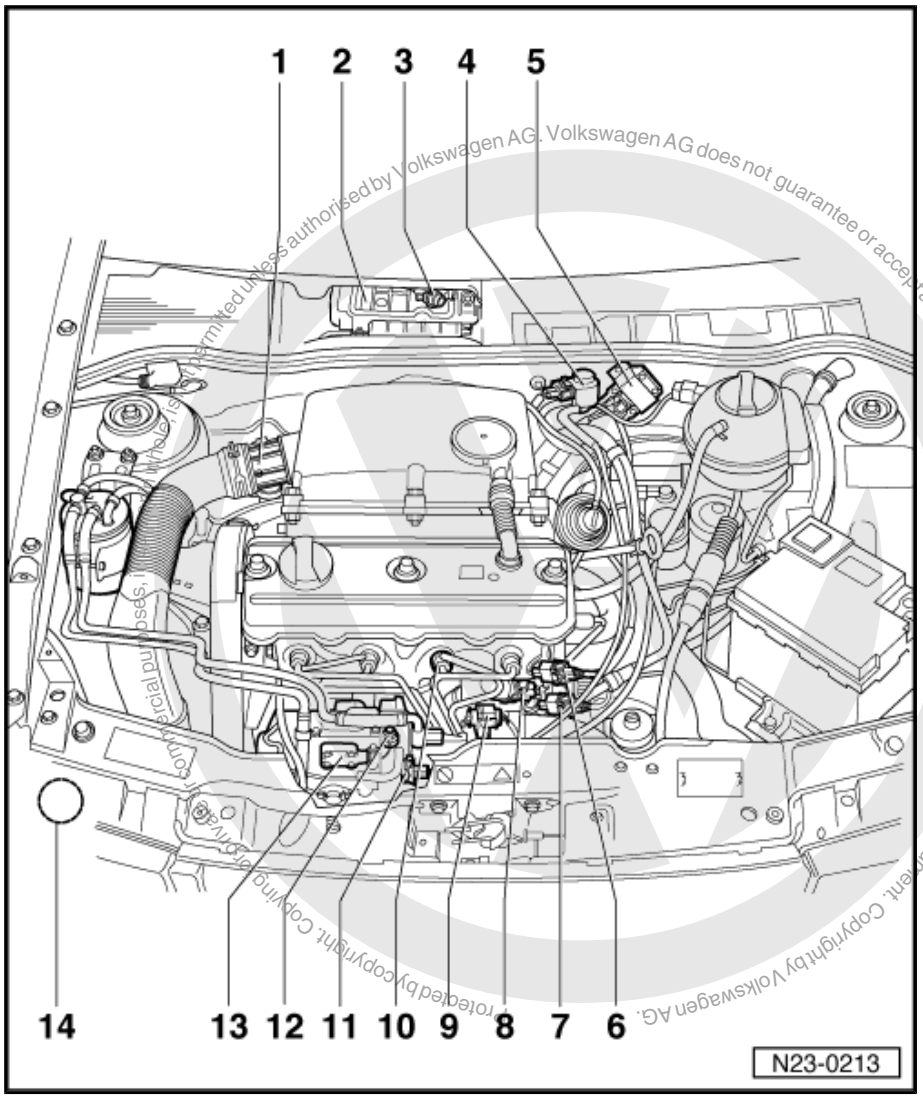

satelettronica

message.

4 - Exhaust gas recirculation valve -N18-

5 - Coolant heater element relay -J325-

- ❑ With m-equipment only.
- ❑ With low heat output relay -J359-
- ❑ With high heat output relay -J360-

6 - Connector

- ❑ For needle lift sender -G80- .

7 - Connector

- ❑ For engine speed sender -G28- .

8 - Coolant temperature sender -G62-

9 - Connector for injection pump

- ❑ For fuel temperature sender -G81- .
- ❑ For metering adjuster -N146- .
- ❑ For modulating piston movement sender -G149- .
- ❑ For fuel shut-off valve -N109- (only vehicles with a 10-pin connector).
- ❑ For commencement of injection valve -N108- (only vehicles with a 10-pin connector).

10 - Injector with needle lift sender -G80-

11 - Connector

- ❑ With 7-pin connector for injection pump only.
- ❑ For fuel shut-off valve -N109- .
- ❑ For commencement of injection valve -N108- .

12 - Fuel shut-off valve -N109-

13 - Injection pump quantity adjuster

- ❑ With fuel temperature sender -G81- .
- ❑ With metering adjuster -N146- .
- ❑ With modulating piston movement sender -G149- .

14 - Air filter

- ❑ Location: In front right wheel housing

1.4 Repairing injection pump

- ♦ Observe rules for cleanliness ⇒ page 41
- ♦ Removing and installing injection pump ⇒ page 49
- ♦ Dynamically checking and adjusting commencement of injection ⇒ page 54
- ♦ Always renew seals and O-rings

Protected by copyright. Copying for private or commercial purposes, in part or in whole, is not permitted unless authorised by Volkswagen AG. Volkswagen AG does not guarantee or accept any liability with respect to the correctness of information in this document. Copyright by Volkswagen AG.
satelettronica

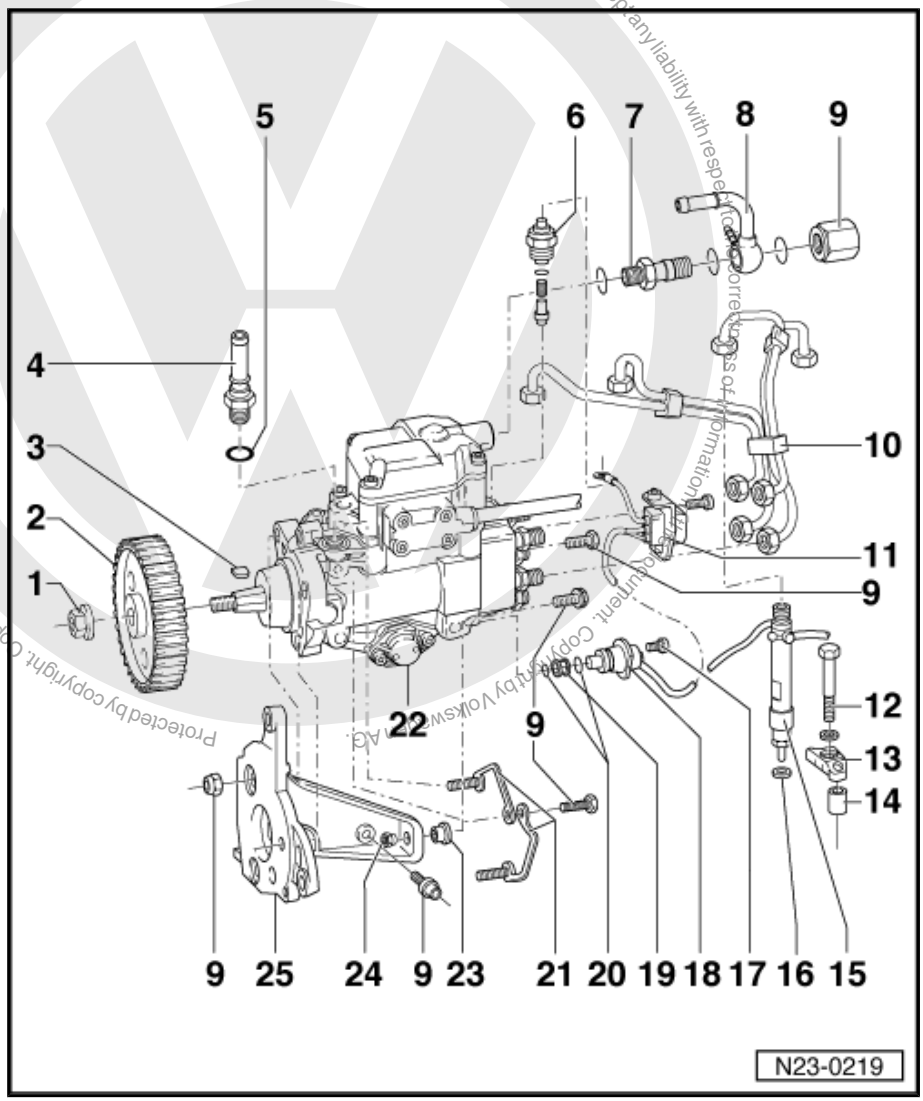

1 - 55 Nm

2 - Injection pump belt pulley
- ❑ Removing ⇒ page 49

3 - Woodruff key
- ❑ Check for secure seating.

4 - Union
- ❑ For supply line.
- ❑ From fuel filter

5 - Seal
- ❑ Renew

6 - Fuel shut off valve -N109- , 40 Nm

7 - Union
- ❑ For return pipe

8 - Return line
- ❑ To regulating valve/fuel filter

9 - 25 Nm

10 - Injector pipes
- ❑ Tighten to 25 Nm
- ❑ Remove with ring spanner -3035-
- ❑ Always remove pipework complete
- ❑ Do not alter shape

11 - Connector
- ❑ For fuel shut-off valve -N109- and commencement of injection valve -N108- .
- ❑ (3-pin) with 7-pin connector for injection pump.

12 - 20 Nm

13 - Retainer

14 - Mounting bracket

15 - Injector
- ❑ For cylinder 3 with needle lift sender -G80- .
- ❑ Removing and installing ⇒ page 57 .
- ❑ Repairing ⇒ page 58

16 - Heat shield seal
- ❑ Renew

17 - 10 Nm

18 - Commencement of injection valve -N108-
- ❑ Checking ⇒ page 17 , final control diagnosis.

19 - Strainer

20 - O-ring
- ❑ Renew

Protected by copyright. Copying for private or commercial purposes, in part or in whole, is not permitted unless authorised by Volkswagen AG. Volkswagen AG does not guarantee or accept any liability with respect to the correctness of information in this document. Copyright by Volkswagen AG.
satelettronica

21 - Bracket

22 - Injection timing device cover
- ❑ Renew O-ring if leaking.

23 - Sleeve
- ❑ Tapered.

24 - 25 Nm
- ❑ Nut with taper.

25 - Bracket

1.5 Repairing fuel filter

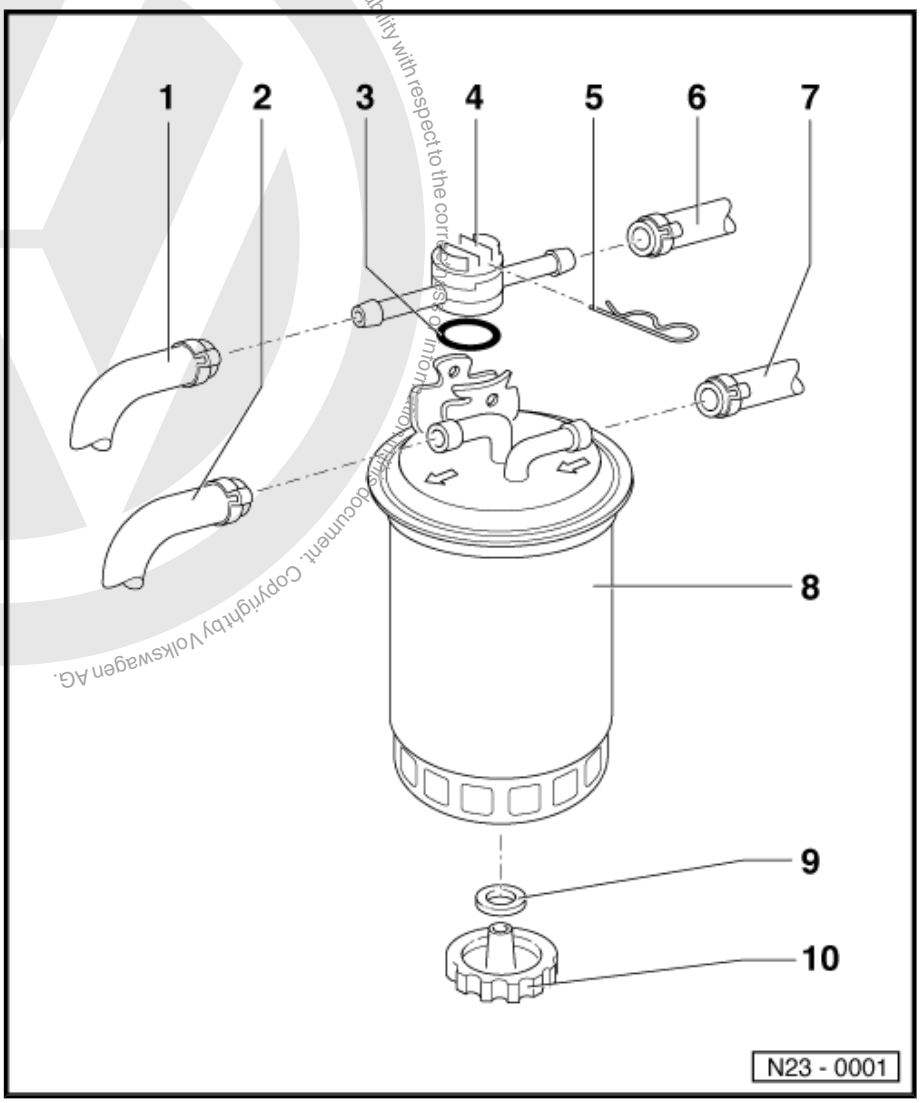

1 - Return line
- ❑ From injection pump

2 - Supply line
- ❑ To injection pump

3 - O-ring
- ❑ Renew

4 - Regulating valve
- ❑ Installation position: arrow points towards fuel tank
- ❑ When changing filter, remove securing clip and take control valve off complete with fuel lines
- ❑ Below + 15 °C: passageway to filter open
- ❑ Over 31 °C: passageway to filter closed

5 - Retaining clip

6 - Return line
- ❑ To fuel tank

7 - Supply line
- ❑ From fuel tank

8 - Fuel filter
- ❑ Fill with diesel fuel before installing
- ❑ Flow direction is marked by arrows
- ❑ Do not interchange connections
- ❑ Renew if damaged.

9 - Gasket
- ❑ Renew if damaged.

10 - Drain plug
- ❑ To bleed remove control valve securing clip and take control valve off complete with fuel lines
- ❑ Loosen and allow approx. 100 cm^3 fluid to drain

Protected by copyright. Copying for private or commercial purposes, in part or in whole, is not permitted unless authorised by Volkswagen AG. Volkswagen AG does not guarantee or accept any liability with respect to the correctness of information in this document. Copyright by Volkswagen AG.
satelettronica

1.6 Repairing accelerator mechanism

1 - Mounting bracket

2 - Accelerator position sender -G79-

- ❑ Checking ⇒ page 92 .
- ❑ Adjusting ⇒ page 47

3 - 10 Nm

4 - Cable cam

- ❑ Installing ⇒ page 47 .

5 - Spring washer

6 - Adjuster screw

7 - 20 Nm

8 - Accelerator pedal

9 - Accelerator pedal shaft

- ❑ Removing and installing ⇒ page 47 .

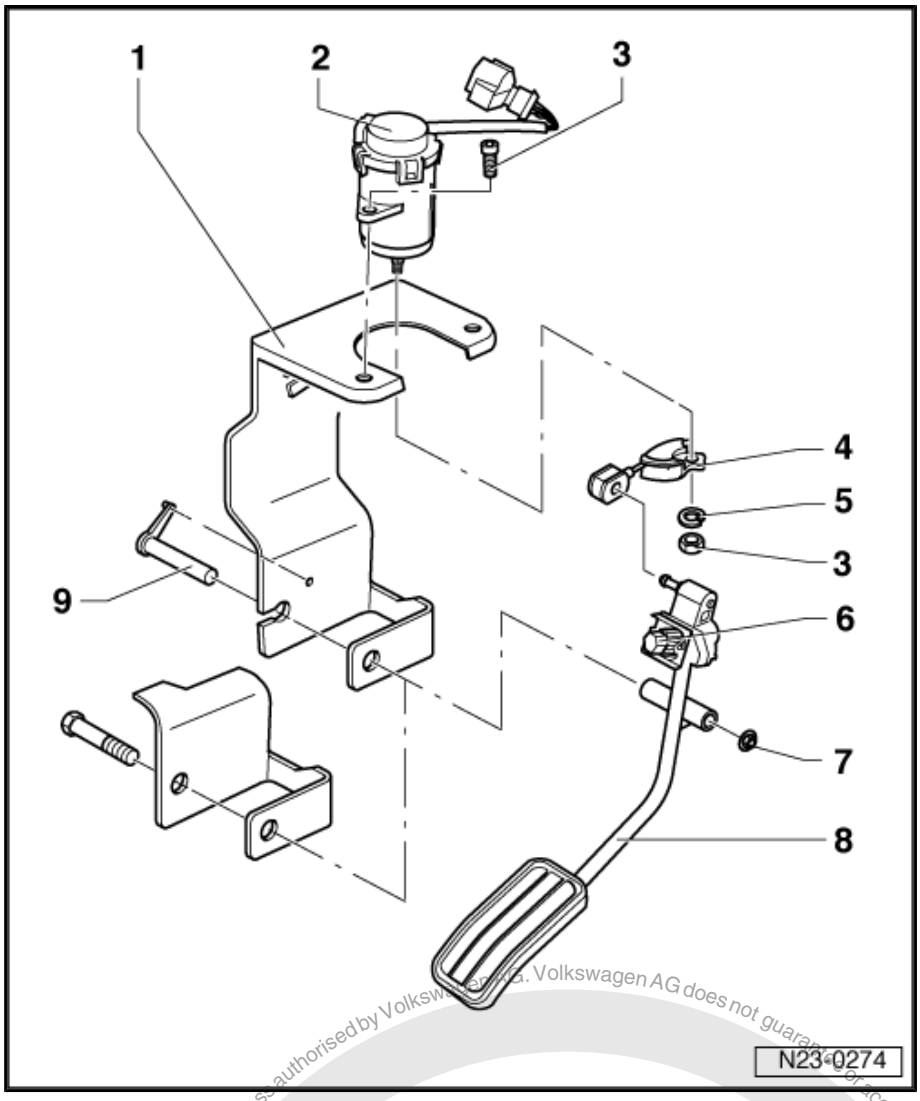

Switch in footwell

1 - Clutch pedal switch -F36-

2 - Brake pedal switch -F47- / brake light switch -F-

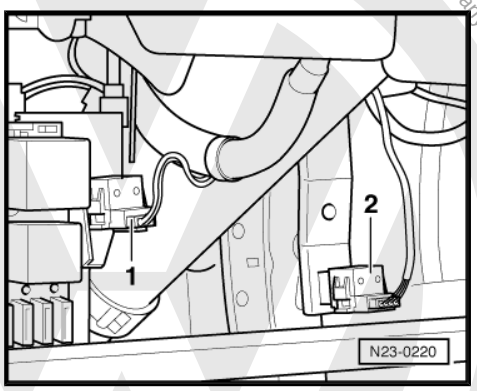

Note

Brake pedal switch -F47- and brake light switch -F- are located together in one housing.

Protected by copyright. Copying for private or commercial purposes, in part or in whole, is not permitted unless authorised by Volkswagen AG. Volkswagen AG does not guarantee or accept any liability with respect to the correctness of information in this document. Copyright by Volkswagen AG.
satelettronica

Installing cable cam

– Bolt cable cam onto sender so that specified dimensions are adhered to when viewed in direction of travel.

a = 22 ± 0.05 mm

b = 41 ± 0.05 mm

c = direction of travel

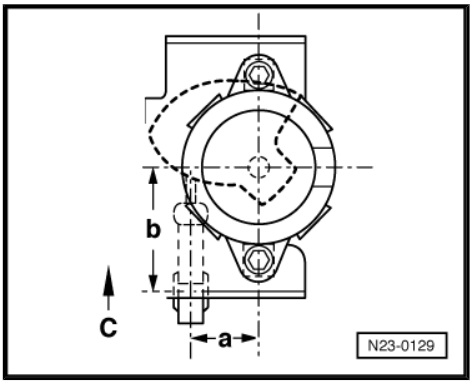

Note

Eye of cable cam must be positioned parallel to direction of travel.

Removing and installing accelerator pedal

To remove accelerator pedal, carefully press accelerator pedal shaft locking mechanism out of bore -arrow-. Then turn shaft with a 6 mm Allen key until it can be pulled out.

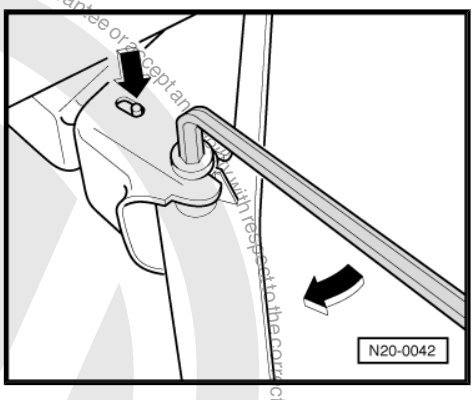

1.7 Checking accelerator position sender - G79- setting

Special tools and workshop equipment required

♦ Fault reader -V.A.G 1551- or vehicle system tester -V.A.G 1552- with diagnosis cable -V.A.G 1551/3-

Procedure

– Connect fault reader -V.A.G 1551- or vehicle system tester -V.A.G 1552- and select engine electronics control unit with “address word 01”. The ignition must be switched on for this purpose. (Connect fault reader -V.A.G 1551- and select engine electronics control unit ⇒ page 2 .)

Indicated on display:

```
Rapid data transfer                    HELP
Select function XX
```

– Press buttons 0 and 8 for function “Read measured value block” and confirm entry with Q button.

Indicated on display:

```
Read measured value block              HELP
Input display group number XXX
```

– Press buttons 0, 0 and 2 for “Display group number 2” and confirm entry with Q button.

– Check accelerator position display in display zone 2. The accelerator pedal must not be depressed. Specification: 0.0%

```
Read measured value block 2            ->
0 rpm     0.0%       0 1 0       18.4 °C
```

– Depress accelerator slowly until fully down, and observe display zone 2. Accelerator position value must increase continually and reach 100% just before full throttle stop.

```
Read measured value block 2            ->
0 rpm     100%       0 0 0       18.4 °C
```

Protected by copyright. Copying for private or commercial purposes, in part or in whole, is not permitted unless authorised by Volkswagen AG. Volkswagen AG does not guarantee or accept any liability with respect to the correctness of information in this document. Copyright by Volkswagen AG.
satelettronica

– Adjust accelerator pedal -2-, by turning adjuster screw -1- if necessary, so that 0.0% are displayed when accelerator pedal is not depressed (idle speed) and 100% when accelerator pedal is depressed to just before full-throttle stop.

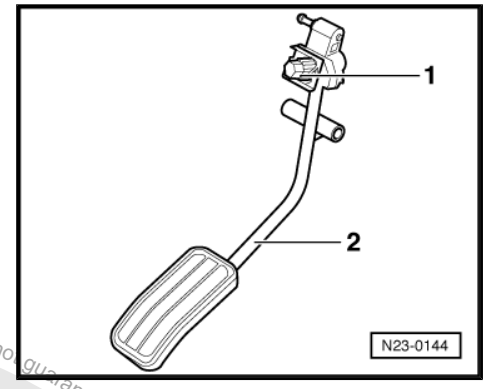

1.8 Setting engine to TDC No. 1 cylinder, engine removed

Special tools and workshop equipment required

♦ TDC setting device -2068 A-

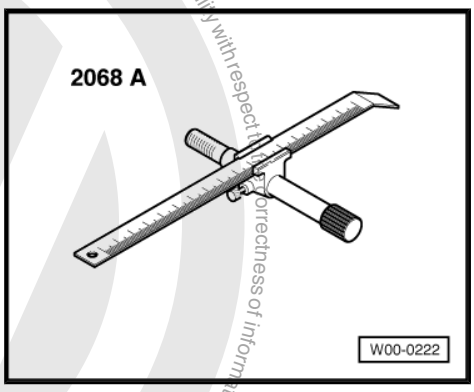

Procedure

– Screw in TDC adjustment bar -2068 A- as shown.

– Set TDC adjustment bar -2068 A- to 13 mm. The left notch of the vernier scale -arrow A- is the reference point.

– Turn crankshaft until flywheel TDC marking aligns with tip of TDC adjustment bar -2068 A- -arrow B-.

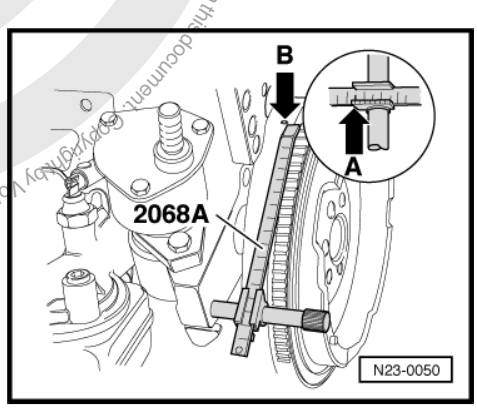

1.9 Removing, installing and testing throttle valve housing

At low engine speeds the depression in the intake manifold is insufficient to guarantee a perfect function of the exhaust gas recirculation system. After starting the engine, the throttle valve is therefore closed up to an engine speed of approx. 2200 rpm to increase the vacuum.

Special tools and workshop equipment required

Protected by copyright. Copying for private or commercial purposes, in part or in whole, is not permitted unless authorised by Volkswagen AG. Volkswagen AG does not guarantee or accept any liability with respect to the correctness of information in this document. Copyright by Volkswagen AG.
satelettronica

- Hand vacuum pump with accessories -V.A.G 1390/-

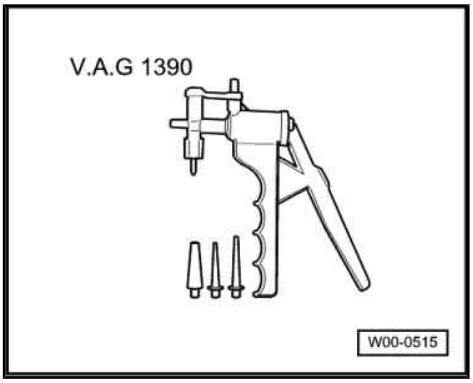

Removing

– Remove intake hose -1-.

– Pull vacuum hose -4- from vacuum unit -6-.

– Release connector -5-.

– Release throttle valve housing -2- from bayonet lock by turning to the right -arrow- and remove.

– Remove seal -3- from intake connecting pipe upper section -7-.

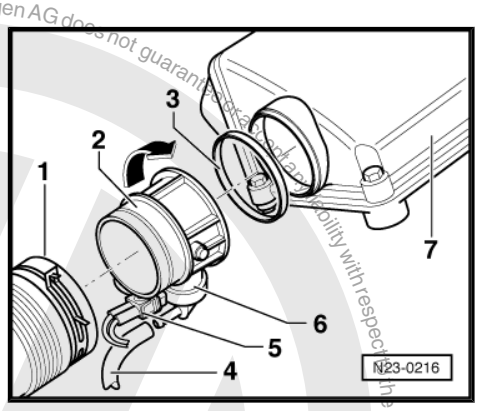

Note

Renew seal -3- if damaged.

Installing

Throttle valve housing installation is carried out in the reverse sequence of removal.

Checking function of vacuum unit

– Start engine and run at idling speed.

– Connect hand vacuum pump with accessories -V.A.G 1390/- to vacuum unit -1- and generate vacuum.

Specification: Throttle valve must close to stop and remain closed.

If the specification is not achieved:

– Renew throttle valve housing.

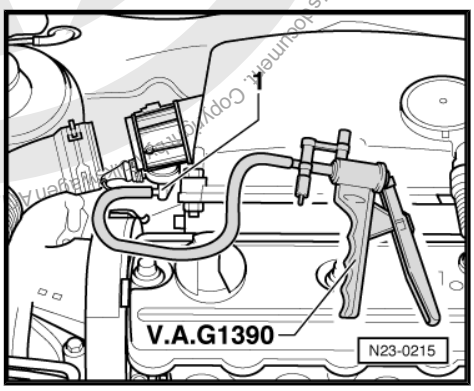

1.10 Removing and installing injection pump

Special tools and workshop equipment required

- Support bracket -10 - 222 A- with rack -10 - 222 A /1-
- 2-hole pin wrench -3387-
- Adjustment bar -2065 A-
- Locking pin -2064-
- Puller -3032-

Protected by copyright. Copying for private or commercial purposes, in part or in whole, is not permitted unless authorised by Volkswagen AG. Volkswagen AG does not guarantee or assume any liability with respect to the correctness of information in this document. Copyright by Volkswagen AG.
satelettronica

- Ring spanner -3035-
- Counterhold tool -3036-
- Torque wrench -V.A.G 1331-

Removing

– Remove intake hose between air filter and throttle valve housing.

– Remove upper toothed belt guard and cylinder head cover.

– Turn crankshaft to TDC No. 1 cylinder.

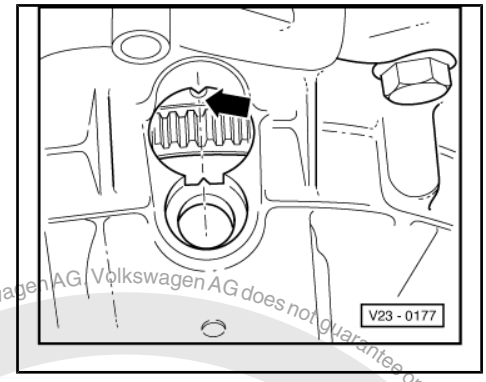

– Lock camshaft using adjustment bar -2065 A- .

– Align adjustment bar -2065 A- as follows: Turn locked camshaft until one end of the adjustment bar -2065 A- contacts cylinder head. Measure clearance which has arisen at other end of adjustment bar -2065 A- with a feeler gauge. Slide a feeler gauge with half of clearance dimension between adjustment bar -2065 A- and cylinder head. Now turn camshaft until adjustment bar -2065 A- contacts feeler gauge. Now insert a second feeler gauge with the same dimension between adjustment bar -2065 A- and cylinder head at other end.

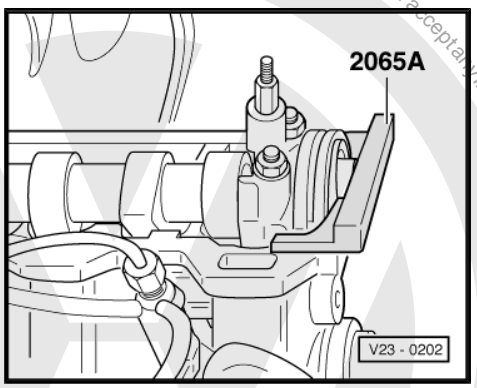

– Support bracket -10 - 222 A- with rack -10 - 222 A /1- .

– Insert support bracket into lifting eye on left cylinder head and raise engine slightly.

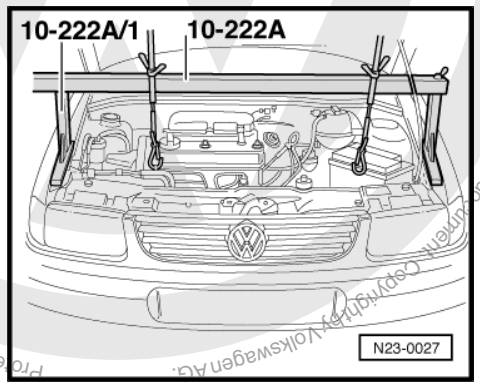

– Remove engine mount.

– Remove lock carrier with attaching parts ⇒ General body repairs, exterior; Rep. Gr. 50 ; Removing and installing lock carrier with attaching parts

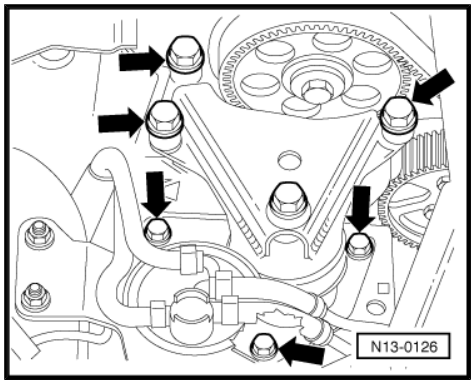

Note

Do not detach the coolant hoses.

Protected by copyright. Copying for private or commercial purposes, in part or in whole, is not permitted unless authorised by Volkswagen AG. Volkswagen AG does not guarantee or accept any liability with respect to the correctness of information in this document. Copyright by Volkswagen AG.
satelettronica

– Place lock carrier on the left longitudinal member and a suitable object, e.g. bucket. If necessary, secure lock carrier to prevent slipping off.
– Remove idler roller.

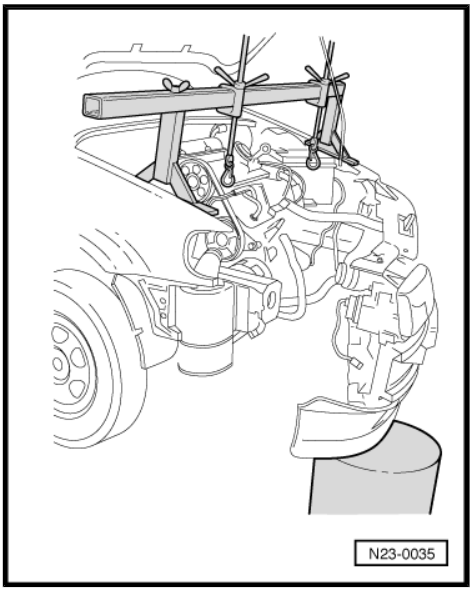

– Loosen nuts on belt tensioner -arrow-.
– Remove bracket from cylinder block.
– Remove toothed belt from camshaft and injection pump toothed belt sprockets.
– Lock injection pump sprocket with locking pin -2064- .
– Unscrew injection pump sprocket securing nut.

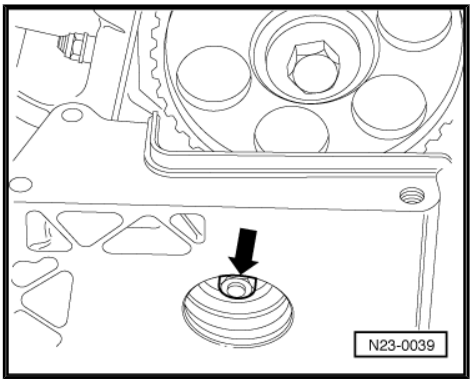

– Loosen puller arms and position puller.
– Align arms with bores on injection pump sprocket and tighten.
– Tension injection pump sprocket with puller.
– By tapping lightly on spindle of puller-arrow-, loosen injection pump sprocket from injection pump taper (hold sprocket to prevent it from falling down).
– Unscrew all fuel lines from pump.
– Cover openings with a clean cloth.

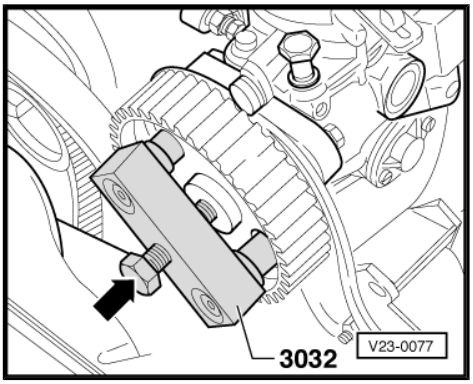

Note

Use ring spanner -3035- to release injection pipes.

– Disconnect fuel shut-off valve/commencement of injection valve connector.
– Disconnect quantity adjuster connector and unclip connector from retainer.

Protected by copyright. Copyright by Volkswagen AG. Volkswagen AG does not guarantee or accept any liability with respect to the correctness of information in this document. Copyright by Volkswagen AG. Copying for private or commercial purposes, in part or in whole, is not permitted unless authorised by Volkswagen AG.
satelettronica

– Remove securing bolts from console -arrows-.

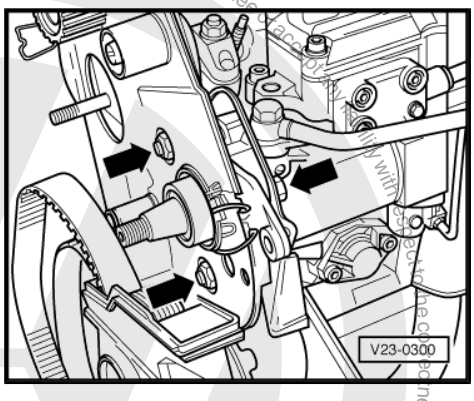

– Then remove securing bolt from rear support -arrow-.

– Take off injection pump.

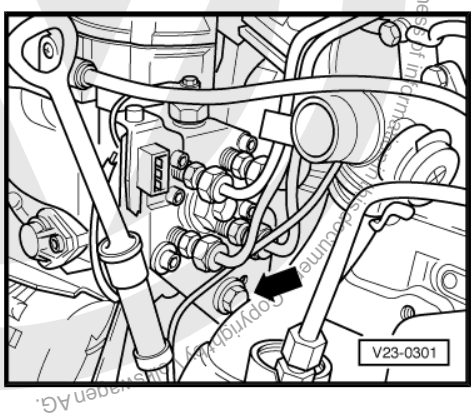

Installing

– Insert injection pump into console and then tighten securing bolt on rear support with conical nut first.

– Align injection pump to central position in console elongated holes and secure hand-tight.

Note

Commencement of injection is set dynamically using fault reader -V.A.G 1551- .

– Install injection pump sprocket and lock with locking pin -2064- . When installing observe spring washer seating.

– Tighten securing nut to 55 Nm.

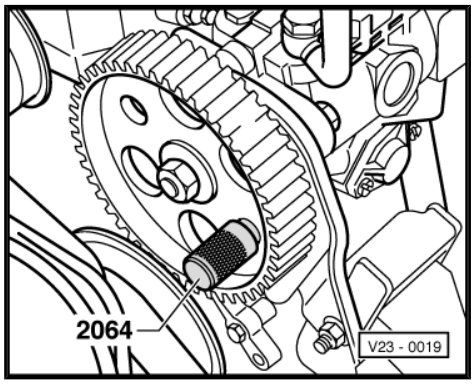

Note

To loosen and tighten camshaft sprocket, never use adjustment bar -2065 A- as a counterhold! Use counterhold -3036- .

– Loosen camshaft gear securing bolt a half turn.

– Place a drift through hole in the rear of the toothed belt guard and release the camshaft pulley from camshaft taper with a blow from a hammer.

– Take off camshaft sprocket.

– Check whether TDC mark on flywheel and reference mark are aligned.

– Place tooth belt on injection pump pulley and tensioning roller.

– Fit camshaft sprocket into toothed belt and secure sprocket to camshaft so that the sprocket can still turn.

– Install idler roller.

– Remove locking pin -2064- from injection pump sprocket.

Protected by copyright. Copying for private or commercial purposes, in part or in whole, is not permitted unless authorised by Volkswagen AG. Volkswagen AG does not guarantee or accept any liability with respect to the correctness of information in this document. Copyright by Volkswagen AG.
satelettronica

– Tension toothed belt. To do this, turn pin wrench -3387-) clockwise until notch and protrusion -arrows- are aligned.

1 - Commercially available ratchet, 3/8" drive

2 - Support bracket -10 - 222 A- with rack -10 - 222 A /1-

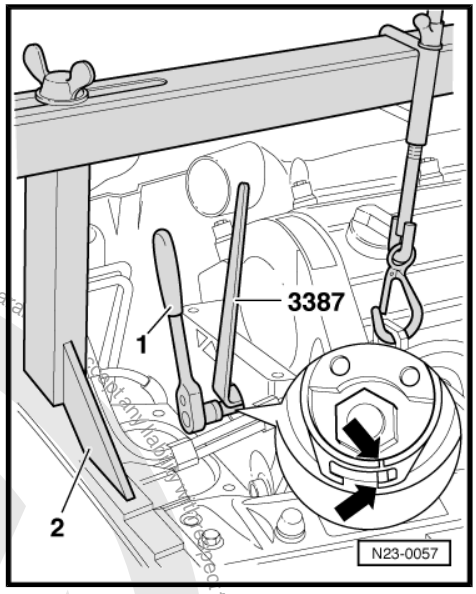

Note

If eccentric has been turned too far, tensioning roller must be completely relieved of tension and retensioned again. The eccentric should not be turned back just the amount it was turned too far.

– Tighten securing nut to 20 Nm.

– Check TDC mark on flywheel again.

– Tighten camshaft gear securing bolt to 45 Nm.

– Remove adjustment bar -2065 A- from camshaft.

– Turn crankshaft two rotations in engine direction of rotation until crankshaft is set to TDC No. 1 cylinder again.

– Check if the

♦ TDC mark on flywheel is correctly positioned

♦ the adjustment bar -2065 A- is fitted in the camshaft

♦ the locking pin -2064- is locked into the injection pump pulley

♦ the setting for the tensioning roller (notch/protrusion) is correct.

– If notch and protrusion are not located opposite each other, retension belt tensioner. To do this, hold belt tensioner with pin wrench -3387- , loosen securing nut, continue turning eccentric clockwise until notch and protrusion are located opposite each other and tighten securing nut to 20 Nm.

– Turn crankshaft two rotations in engine direction of rotation until crankshaft is set to TDC No. 1 cylinder again.

– Repeat check.

– Connect injection pipes, fuel supply line and electrical lines.

Fill injection pump with diesel as follows.

– Screw adapter set -V.A.G 1318/10-12- into injection pump return aperture.

– Connect hand vacuum pump with accessories -V.A.G 1390/- to adapter with approx. 1 m transparent plastic hose.

– Operate hand vacuum pump with accessories -V.A.G 1390/- until fuel comes out of return aperture. Do not draw fuel into vacuum pump with accessories -V.A.G 1390/- .

– Remove adapter and connect fuel return line.

– Attach bracket to cylinder block.

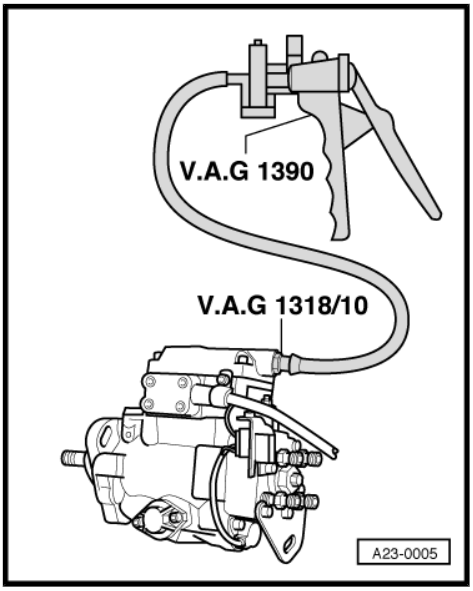

satelettronica

– Install engine mount.

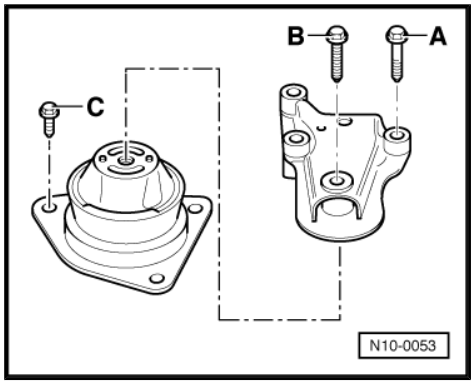

Note

Bolts -A- and -C- must not be reused.

A = 40 Nm + 1/4 turn (90°) further, B = 50 Nm, C = 20 Nm + 1/8 turn (45°) further

– Install toothed belt guard, cylinder head cover and intake hose.

– Install lock carrier with attaching parts ⇒ General body repairs, exterior; Rep. Gr. 50 ; Removing and installing lock carrier with attaching parts

– Dynamically check commencement of injection and adjust if necessary ⇒ page 54 .

1.11 Dynamically checking and adjusting commencement of injection

Special tools and workshop equipment required

- Fault reader -V.A.G 1551- or vehicle system tester -V.A.G 1552- with diagnosis cable -V.A.G 1551/3-
- Ring spanner -3035-
- Torque wrench -V.A.G 1331-

Note

- *Dynamically checking and correcting commencement of injection is only possible in function 04 "Engine basic setting".*
- *Commencement of injection must always be checked, and if necessary adjusted, after renewing the toothed belt or loosening the injection pump bolts or toothed belt pulleys.*

Test and adjustment prerequisites

- Mechanical engine basic setting OK.
- Toothed belt tension OK.

Procedure

– Connect fault reader -V.A.G 1551- or vehicle system tester -V.A.G 1552- and select engine electronics control unit with "address word 01". Engine must be idling. (Connect fault reader -V.A.G 1551- and select engine electronics control unit ⇒ page 2 .)

Indicated on display:

```
Rapid data transfer                    HELP
Select function XX
```

– Press buttons 0 and 4 for function "Initiate basic settings" and confirm entry with Q button.

Indicated on display:

```
Basic setting                          HELP
Input display group number XXX
```

– Press 0 button three times for "display group number 0" and confirm entry with Q button.

Indicated on display: (1...10 = display zones)

```
System in basic setting 0              ->
  1   2   3   4   5   6   7   8   9   10
```

Protected by copyright. Copyright by Volkswagen AG.
Volkswagen AG does not guarantee or accept any liability with respect to the correctness of information in this document. Copyright by Volkswagen AG. Commercial purposes, in part or in whole, is not permitted unless authorised by Volkswagen AG.
satelettronica

Commencement of injection in display zone 2 is dependant on fuel temperature in display zone 9.

Engine code AGD (with 68-pin control unit)

A - display zone 2 commencement of injection B - display zone 9 fuel temperature C - specified value range for commencement of injection

Example

Numerical value 90 in display zone 9 -B- corresponds to a numerical value range of 41..77 in display zone 2 -A-.

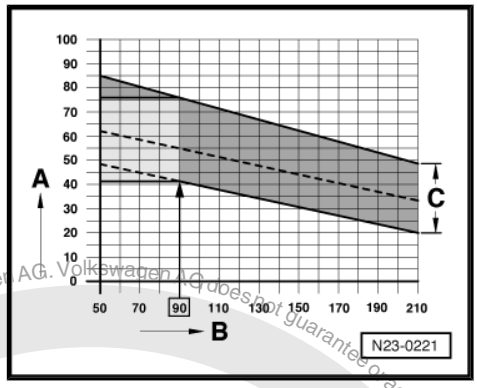

Engine code AGD (with 80-pin control unit)

A - display zone 2 commencement of injection B - display zone 9 fuel temperature C - specified value range for commencement of injection

Example

Numerical value 90 in display zone 9 -B- corresponds to a numerical value range of 41..78 in display zone 2 -A-.

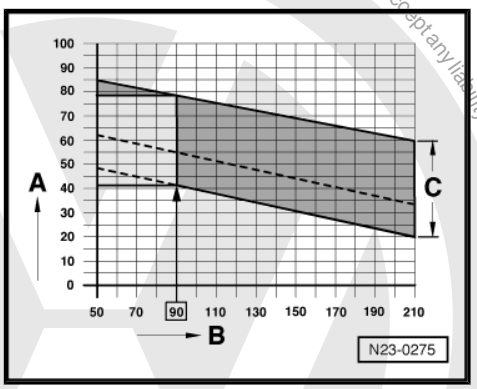

Engine codes AHG, AKU

Protected by copyright. Copying for private or commercial purposes, in part or in whole, is not permitted unless authorised by Volkswagen AG. Volkswagen AG does not guarantee or accept any liability with respect to the correctness of information in this document. Copyright by Volkswagen AG.
satelettronica

A - display zone 2 commencement of injection B - display zone 9 fuel temperature C - specified value range for commencement of injection

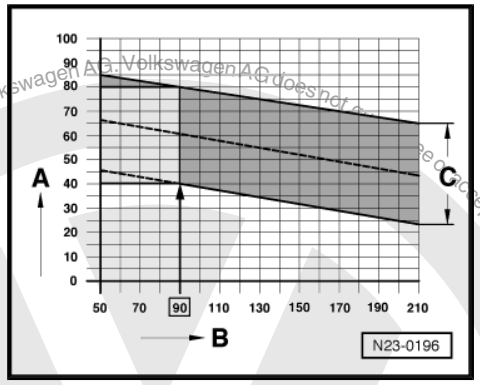

Example

Numerical value 90 in display zone 9 -B- corresponds to a numerical value range of 40..79 in display zone 2 -A-.

Continuation for all engine codes

Note

- *If the commencement of injection is advanced, turn injection pump in direction of engine rotation; if the commencement of injection is retarded, turn counter to direction of engine rotation.*
- *If, when checking the commencement of injection, the specifications are within zone -C- then no readjustment is required. After repairs, e.g. removing and installing injection pump, adjusting timing, the commencement of injection must be set to the mean valve (dashed line) of specification zone -C-.*

– Loosen injection pump securing bolts approx. one turn, leaving the easiest bolt to reach till last.

– Hold injection pump by hand under tension in direction to be adjusted.

– Carefully loosen last securing bolt until the pump can be turned slightly and then retighten securing bolt.

– Observe value in display zone 2 and, if necessary, adjust again until the mean value for specification zone -C- is displayed.

– Tighten injection pump securing bolts to 25 Nm.

– Check commencement of injection again.

– Press [→] button.

– Press buttons [0] and [6] for function “End data transfer” and confirm entry with [Q] button.

Note

Loosen and retighten (25 Nm) the injection pipes on the injection pump after dynamically adjusting the injection pump. This relieves the strain on pipes and prevents vibration fatigue fractures.

1.12 Checking timing

Special tools and workshop equipment required

- Adjustment bar -2065 A-
- Locking pin -2064-
- Counterhold tool -3036-
- Torque wrench -V.A.G 1331-

Procedure

– Remove upper toothed belt guard and cylinder head cover.

– Check toothed belt tension.

Protected by copyright. Copying for private or commercial purposes, in part or in whole, is not permitted unless authorised by Volkswagen AG. Volkswagen AG does not guarantee or accept any liability with respect to the correctness of information in this document. Copyright by Volkswagen AG.
satelettronica

– Set engine to TDC for cylinder No. 1 -arrow-. Adjustment bar -2065 A- must fit into recess in camshaft. If adjustment bar -2065 A- cannot be inserted, adjust timing as follows.

– Rotate crankshaft so that adjustment bar -2065 A- can be inserted.

– Align adjustment bar -2065 A- as follows: Turn locked camshaft until one end of the adjustment bar -2065 A- contacts cylinder head. Use feeler gauge to measure clearance which has arisen at other end of adjustment bar -2065 A- . Insert a feeler gauge with half of the clearance dimension between adjustment bar -2065 A- and cylinder head. Now turn camshaft until adjustment bar -2065 A- contacts the feeler gauge. Insert a 2nd feeler gauge of same dimension at the other end between adjustment bar -2065 A- and cylinder head.

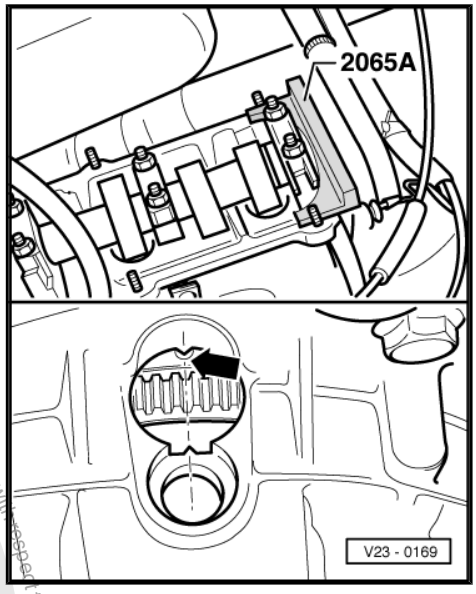

Note

To loosen and tighten camshaft sprocket, never use adjustment bar -2065 A- as a counterhold! Use counterhold -3036- .

– Loosen camshaft gear securing bolt a half turn.

– Place a drift through hole in the rear of the toothed belt guard and release the camshaft pulley from camshaft taper with a blow from a hammer.

– Lock injection pump sprocket with locking pin -2064- .

– Check TDC position of crankshaft.

Flywheel TDC marking must align with sprue on clutch housing.

– Remove locking pin -2064- .

– Tighten camshaft gear securing bolt to 45 Nm.

– Remove adjustment bar -2065 A- .

– Install toothed belt guard and cylinder head cover.

– Check commencement of injection of injection pump dynamically ⇒ page 54

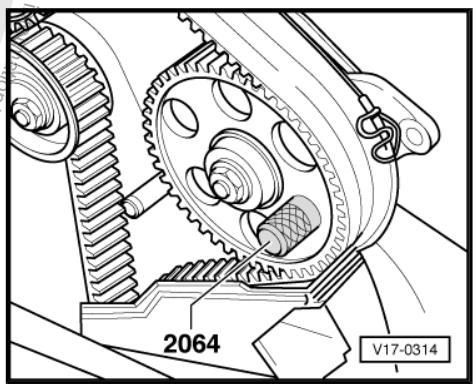

1.13 Removing and installing injectors

Special tools and workshop equipment required

- Torque wrench -V.A.G 1331-
- Ring spanner -3035-

Note

- *Defective injectors cause the following faults:*
- *Misfiring*
- *Knocking in one or more cylinders*
- *Engine over-heating*
- *Loss of power*
- *Excessive black exhaust smoke*
- *Higher fuel consumption*
- *Excessive blue smoke when starting from cold*

satelettronica

Defective injectors can be located by loosening the injector pipe unions in turn with the engine running at a fast idling speed. If engine speed remains constant after loosening a pipe union, this indicates a defective injector.

Removing

– Remove injection lines with ring spanner -3035- .

Note

Always remove pipe set complete. Do not alter shape.

– Remove securing nut, take off retainer and take out injector.

Installing

Note

Always renew heat insulating seal between cylinder head and injectors.

– Insert injector.
– Check mounting brackets are seated correctly in cylinder head.
– Fit retainer.

Specified torques:

Injection lines = 25 Nm.

Retainer bolt = 20 Nm.

1.14 Repairing injectors

These engines are equipped with dual spring injectors. The fuel injected therefore occurs in 2 stages. If faults occur with these injectors then they are to be exchanged as neither repairs nor pressure setting is possible.

Special tools and workshop equipment required

♦ Injector tester -V.A.G 1322-

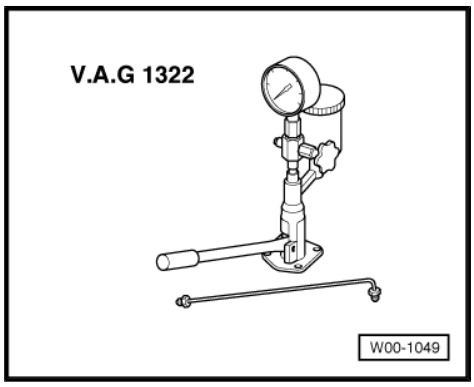

Test prerequisite

• Pressure gauge on

Copyright by Volkswagen AG. Volkswagen AG does not guarantee or accept any liability with respect to the correctness of information in this document. Copyright by Volkswagen AG. Prior to use of this document, please contact Volkswagen AG. Copyright by Volkswagen AG. Reproduction, in whole or in part, is not permitted unless authorised by Volkswagen AG.

satelettronica

Checking injection pressure

WARNING

When testing injectors ensure that the jet of fuel does not contact the hands as the high pressure will cause the fuel to penetrate the skin and may cause severe injuries.

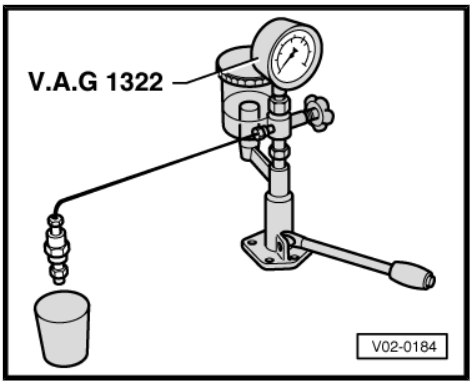

- Connect injector to injector tester -V.A.G 1322- .
- Press pump lever down slowly. Read off spray pressure at commencement of spraying. If spray pressure deviates from specification, renew injectors.

Specifications: (Pressure) new injectors: 190 ... 200 bar Wear limit: 170 bar

Checking for leaks

- Move pump lever down slowly and maintain a pressure of approx. 150 bar for 10 seconds. No fuel should leak from the nozzle tip.
- If injector leaks, replace.

Protected by copyright. Copying for private or commercial purposes, in part or in whole, is not permitted unless authorised by Volkswagen AG. Volkswagen AG does not guarantee or accept any liability with respect to the correctness of information in this document. Copyright by Volkswagen AG.
satelettronica

2 Sealing injection pump

2.1 Sealing quantity adjuster

Special tools and workshop equipment required

- ♦ Torque wrench -V.A.G 1331-
- ♦ Additional bracket -T10108/1-
- ♦ Triangular wrench -T 10366-
- ♦ Vehicle diagnosis, testing and information system -VAS 5051-

– Determine the quantity injected by the injection pump as follows:

Test prerequisites

Mechanical engine basic setting OK.

Toothed belt tension OK (camshaft drive toothed belt) ⇒ 4-cyl. diesel engine, mechanical system; Rep. Gr. 15 ; Removing and installing, tensioning toothed belt

Coolant temperature must be at least 80 °C.

Procedure

– Connect vehicle diagnosis, testing and information system -VAS 5051- ⇒ page 2 . When doing this the engine must be running at idling speed.

– Select “self-diagnosis” operating mode.

– Press “Engine electronics” button on display.

– Select “Read measured value block” button on display.

– Select “1 - Display group 1” on keypad in display.

– Viewed from top, observe value in second position. (corresponds to 2.2...9 mg/stroke).

– Note injected quantity value.

– Remove injection pump ⇒ page 49 .

– Dismantle union for return ⇒ Item 7 (page 44) and drain injection pump by holding it with return bore pointing downwards. Catch escaping fuel.

– Attach additional bracket -T10108/1- to injection pump flange and tighten bolts -A- to 20 Nm.

– Via additional bracket -T10108/1- , secure injection pump in vice.

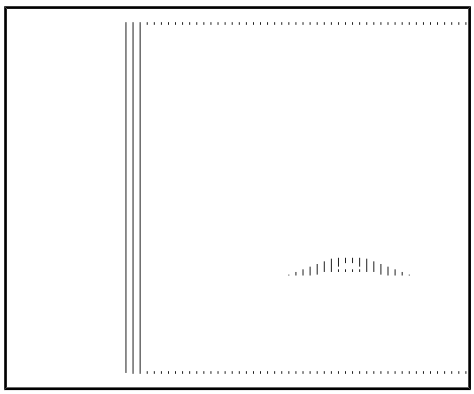

Protected by copyright. Copying for private or commercial purposes, in part or in whole, is not permitted unless authorised by Volkswagen AG. Volkswagen AG does not guarantee or accept any liability with respect to the correctness of information in this document. Copyright by Volkswagen AG.
satelettronica

– Mark position of quantity adjuster versus pump housing with a scriber mark -arrow-.
– Remove cable from fuel shut-off valve -N109- ⇒ page 63 incl. bracket.
– Unscrew bolts -A-.

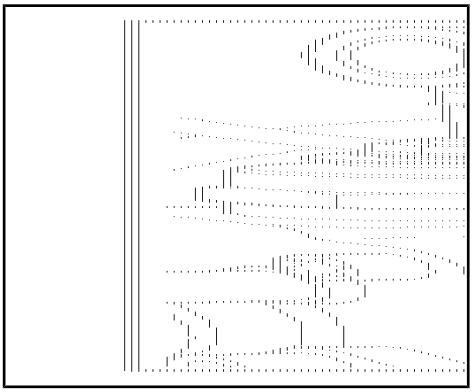

– Unscrew special bolt -B- with triangular wrench -T 10366- .
– Swivel quantity adjuster completely to side.

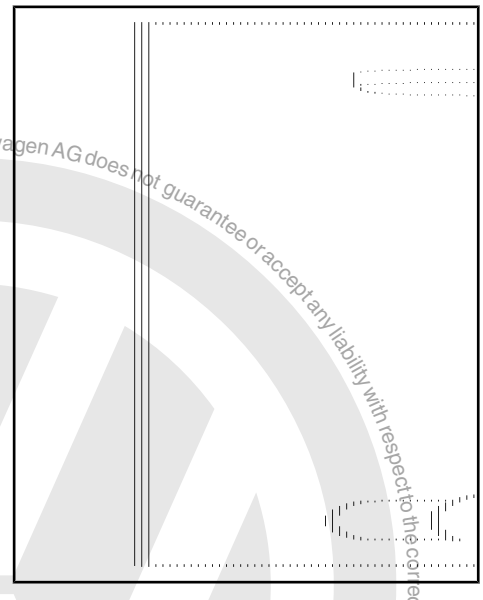

Note

Pay attention to corrosion and deposits in area of flange.

– Carefully lever old seal from seat and renew. Ensure “lug” -arrow- is seated correctly.

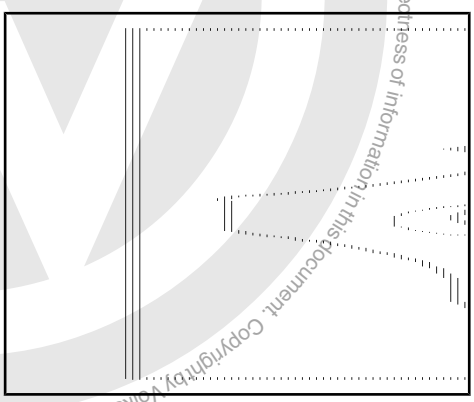

Protected by copyright. Copying for private or commercial purposes, in part or in whole, is not permitted unless authorised by Volkswagen AG. Volkswagen AG does not guarantee or accept any liability with respect to the correctness of information in this document. Copyright by Volkswagen AG.
satelettronica

– Carefully position quantity adjuster onto injection pump.

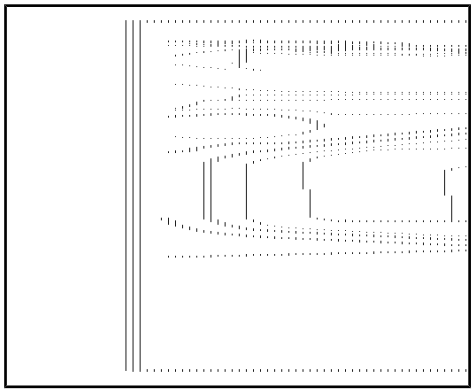

Caution

Ensure that ball stud of quantity adjuster -1- engages properly in recess of quantity slide valve -2-.

– Loosely tighten quantity adjuster securing bolts hand-tight.
– Bring quantity adjuster to “scriber mark”.
– Tighten securing bolts -omit special bolt- diagonally to 9 Nm.
– Unscrew quantity adjuster cover securing bolts and remove cover.

Note

Pay attention to corrosion and deposits in area of flange.

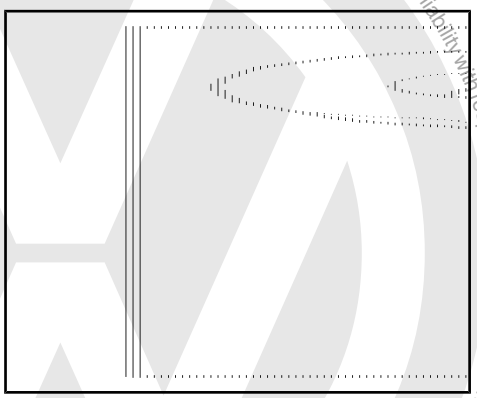

– Carefully lever old seal from seat and renew. Ensure “lug” -arrow- is seated correctly.
– Position cover onto injection pump.
– Position securing bolts and tighten to 9 Nm.
– Install union for return ⇒ Item 7 (page 44) and tighten to 27 Nm.
– Install injection pump ⇒ page 49 and fill via return line using diesel extractor -VAS 5226- .

Note

After loosening quantity adjuster, quantity injected must be checked and corrected if necessary ⇒ page 62 .

2.2 Checking and adjusting quantity injected

Special tools and workshop equipment required

♦ Vehicle diagnosis, testing and information system -VAS 5051-

Test prerequisites

Mechanical engine basic setting OK.

Toothed belt tension OK (camshaft drive toothed belt) ⇒ 4-cyl. diesel engine, mechanical system; Rep. Gr. 15 ; Removing and installing, tensioning toothed belt

Coolant temperature must be at least 80 °C.

Procedure

– Connect vehicle diagnosis, testing and information system -VAS 5051- ⇒ page 2 . When doing this the engine must be running at idling speed.
– Select “self-diagnosis” operating mode.
– Press “Engine electronics” button on display.
– Select “Read measured value block” button on display.

Protected by copyright. Copyright by Volkswagen AG. Copyright by Volkswagen AG. Volkswagen AG does not guarantee or accept any liability with respect to the correctness of information in this document. Copyright by Volkswagen AG. Volkswagen AG. is not permitted unless authorised by Volkswagen AG. in part or in whole, is not permitted unless authorised by Volkswagen AG. Volkswagen AG does not guarantee or accept any liability with respect to the correctness of information in this document.
satelettronica

– Select “1 - Display group 1” on keypad in display.

– Viewed from top, observe value in second position. (corresponds to 2.2...9 mg/stroke).

– Note injected quantity value.

Note

Injection pump must be reset to the previously noted injection quantity value.

If the specification is not achieved:

– Loosen quantity adjuster securing bolts max. $^1/_4$ turn.

– Observe injected quantity value on display and shift quantity adjuster in necessary direction by tapping gently with a plastic hammer:

♦ Towards toothed belt sprocket: Quantity injected increases.

♦ Towards distributor head: Quantity injected decreases.

– After achieving specification, tighten quantity adjuster securing bolts to 9 Nm.

2.3 Sealing distributor head

Special tools and workshop equipment required

♦ Torque wrench -V.A.G 1331-

♦ Additional bracket -T10108/1-

– Remove injection pump ⇒ page 49 .

– Dismantle union for return ⇒ Item 7 (page 44) and drain injection pump by holding it with return bore pointing downwards. Catch escaping fuel.

– Attach additional bracket -T10108/1- to injection pump flange and tighten bolts to 20 Nm.

– Secure injection pump in vice as shown.

– Remove retaining plate -A-.

– Remove cable from fuel shut-off valve -N109- incl. bracket -B-.

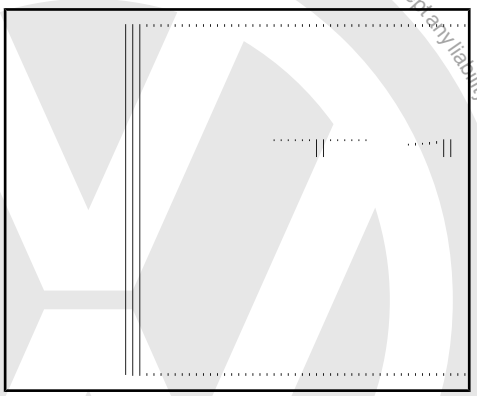

Protected by copyright. Copying for private or commercial purposes, in part or in whole, is not permitted unless authorised by Volkswagen AG. Volkswagen AG does not guarantee or accept any liability with respect to the correctness of information in this document. Copyright by Volkswagen AG.
satelettronica

– Carefully loosen distributor head securing bolts -arrows- diagonally and remove bolts.

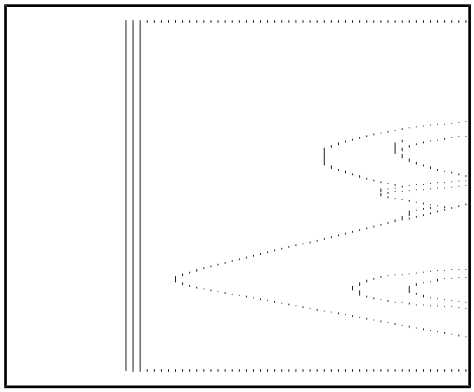

> **Caution**
>
> *Never pull distributor head out upwards, as pressure rollers otherwise fall into injection pump housing and repair is then impossible. Injection pump must be renewed in this case.*

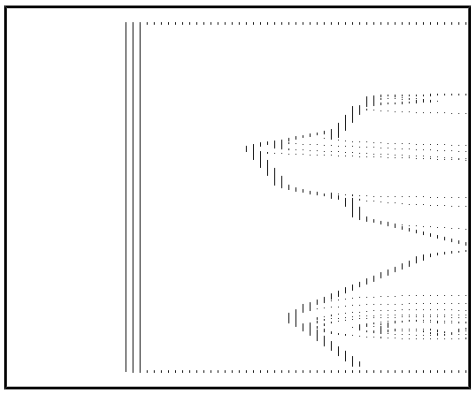

– Remove visible, old seal -arrow- by carefully pulling from seat and opening using a suitable tool. Do not scratch sealing surface.

– First position new seal behind fuel shut-off valve -N109- , then pull carefully over distributor head and allow to roll into groove.

> **Caution**
>
> *Subsequent tightening of distributor head securing bolts must be carried out in small steps under all circumstances, as distributor head may otherwise tilt within injection pump. In this case, the renewed seal is immediately damaged and leaking again!*

– Position securing bolts and carefully and diagonally bolt distributor head back into position in very small steps.

– Tighten securing bolts to 12 Nm.

– Bolt retaining plate and cable of fuel shut-off valve -N109- back on.

– Install injection pump ⇒ page 49 and fill via return line using diesel extractor -VAS 5226- .

2.4 Sealing injection timing device cover

– Place a clean cloth under the injection pump.

– Remove cover screws -1- with commercially available key for Torx socket head bolts, e.g. Hazet 2115-T30 .

– Remove cover -2- and clean it.

– Renew O-ring -3- and install cover with existing shims -4-.

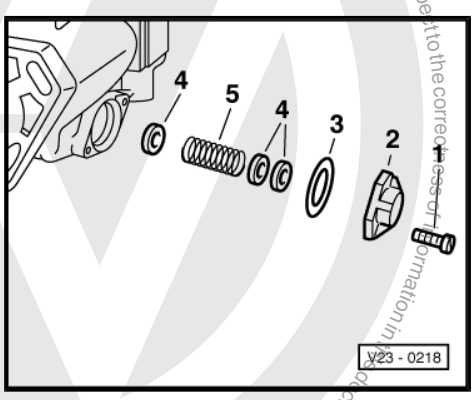

Protected by copyright. Copying for private or commercial purposes, in part or in whole, is not permitted unless authorised by Volkswagen AG. Volkswagen AG does not guarantee or accept any liability with respect to the correctness of information in this document. Copyright by Volkswagen AG.
satelettronica

3 Checking components and functions

3.1 Line and component check with adapter cable (68-pin) -V.A.G 1598/18A- or adapter -V.A.G 1598/22-

Note

- *Use the hand multimeter -V.A.G 1526C- or the multimeter -V.A.G 1715- and the voltage tester -V.A.G 1527B- for checking.*
- *The specified values apply to an ambient temperature from 0 to + 40°C.*
- *If the measured values deviate only slightly from the specified values, clean tester and measuring cable sockets and connectors and repeat check. Before renewing relevant components, check lines and connections and, particularly in case of specified values below 10~Ω, repeat resistance measurement on component.*
- *To connect testers to adapter cable (68-pin) -V.A.G 1598/18A- , use auxiliary cables from auxiliary measuring set -V.A.G 1594C- .*
- *Contact numbers of connector and socket numbers of adapter cable (68-pin) -V.A.G 1598/18A- correspond.*

WARNING

To prevent damage to the electronic components, select appropriate measuring range before connecting the measuring cables and observe the test requirements.

3.2 Checking engine speed sender -G28-

Engine speed sender -G28- is speed and reference mark sender. If it fails, the engine will continue to run in emergency mode; substitute sender is needle lift sender -G80- .

Special tools and workshop equipment required

- Adapter cable (68-pin) -V.A.G 1598/18A- or adapter -V.A.G 1598/22-
- Hand multimeter -V.A.G 1526C- or multimeter -V.A.G 1715-
- Auxiliary measuring set -V.A.G 1594C-
- Current flow diagram

Test procedure

– Switch off ignition.

– Disconnect connector for engine speed sender -G28- ⇒ Installation location overview, page ⇒ page 42 .

satelettronica

– Measure resistance between connector contacts 1+2.

Specification: 1.0…1.5 kΩ

If the specification is not achieved:

– Renew engine speed sender -G28- ⇒ Engine mechanical system; Rep. Gr. 13 ; Dismantling and assembling engine

If the specification is attained:

Engine code AGD (with 68-pin control unit)

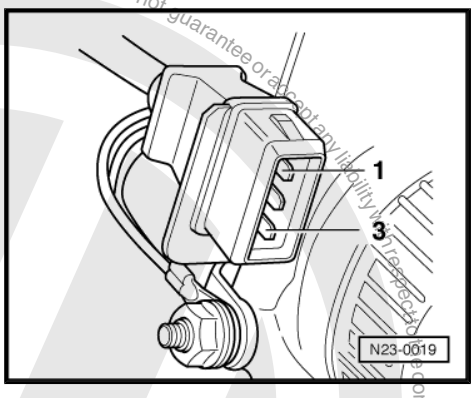

– Connect adapter cable, 68-pin -V.A.G 1598/18A- to control unit wiring harness.

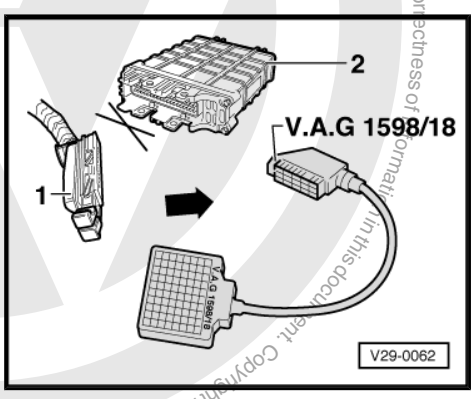

– Check lines between adapter cable (68-pin) -V.A.G 1598/18A- and 3-pin connector for open circuit according to current flow diagram. Contact 1 + socket 33 Contact 2 + socket 8 Contact 3 + socket 1.

Cable resistance: max. 1.5 Ω.

Engine codes AGD (with 80-pin control unit), AHG, AKU

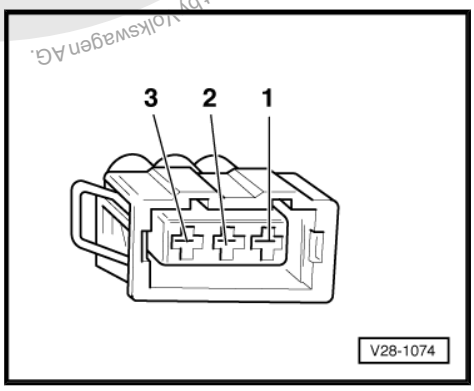

– Connect adapter -V.A.G 1598/22- to control unit wiring harness.

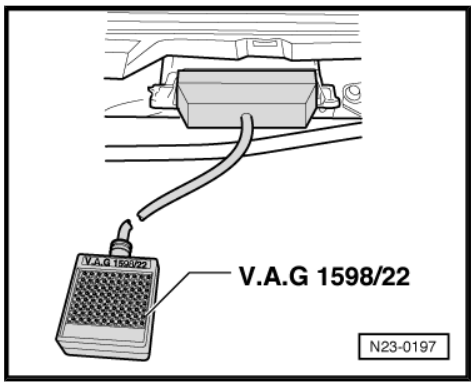

satelettronica

– Check lines between adapter -V.A.G 1598/22- and 3-pin connector for open circuit using current flow diagram. Contact 1 + socket 69 Contact 2 + socket 67 Contact 3 + socket 71

Cable resistance: max. 1.5 Ω.

Continuation for all engine codes

– Check cables at 3-fold connector for short circuit to one another according to current flow diagram.

Specification: ∞ Ω.

If no fault in lines is detected:

– Renew diesel direct injection system control unit -J248- ⇒ page 96 .

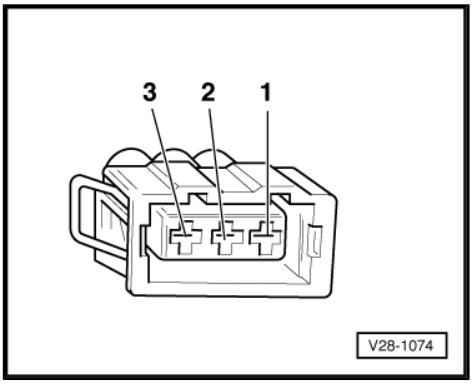

3.3 Checking coolant temperature sender -G62-

Special tools and workshop equipment required

- Fault reader -V.A.G 1551- or vehicle system tester -V.A.G 1552- with diagnosis cable -V.A.G 1551/3-
- Adapter cable (68-pin) -V.A.G 1598/18A- or adapter -V.A.G 1598/22-
- Hand multimeter -V.A.G 1526C- or multimeter -V.A.G 1715-
- Auxiliary measuring set -V.A.G 1594C-
- Current flow diagram

Test procedure

– Connect fault reader -V.A.G 1551- or vehicle system tester -V.A.G 1552- and select engine electronics control unit with “address word” 01. Engine must be idling. (Connect fault reader -V.A.G 1551- and select engine electronics control unit ⇒ page 2 .)

Indicated on display:

```
Rapid data transfer                    HELP
Select function XX
```

– Press buttons 0 and 8 for function “Read measured value block” and confirm entry with Q button.

Indicated on display:

```
Read measured value block              HELP
Input display group number XXX
```

– Press buttons 0, 0 and 7 for “Display group number 7” and confirm entry with Q button.

– Indicated on display:

```
Read measured value block 7             ->
15.4°C              15.9°C          16.7°C
```

– Check coolant temperature value in display zone 4. The temperature value must Increase uniformly and without interruption.

– The fuel temperature is displayed as a substitute when there is a fault.

– If no realistic display appears in display zone 4 or the fuel temperature is displayed as a substitute, check coolant temperature sender -G62- and line connections to sender as follows:

– Press ↵ button.

– Press buttons 0 and 6 for function “End data transfer” and confirm entry with Q button.

Protected by copyright. Copyright by Volkswagen AG. Volkswagen AG does not guarantee or accept any liability with respect to the correctness of information in this document. Copyright by Volkswagen AG. Unless authorised by Volkswagen AG, is not permitted for commercial purposes, in part or in whole, is not permitted.
satelettronica

– Switch off ignition.
– Pull connector from sender ⇒ page 42 .
– Measure resistance between sender contacts 1+3.

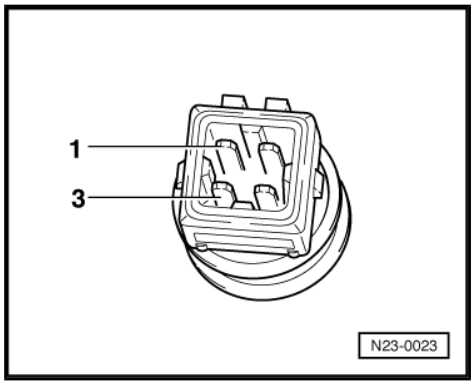

Specification see diagram.

Scale A shows resistance values for temperature range 0..50°C and scale B the values for temperature range 50..100°C.

Examples:

♦ 30 °C corresponds to a resistance of 1500..2000 Ω
♦ 80 °C corresponds to a resistance of 275..375 Ω

If the specification is not achieved:

– Renew the coolant temperature sender -G62- .

If the specification is attained:

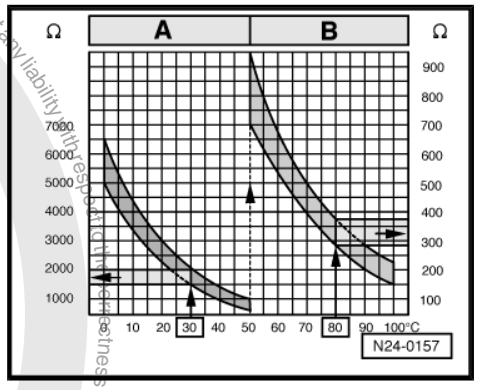

Engine code AGD (with 68-pin control unit)

– Connect adapter cable, 68-pin -V.A.G 1598/18A- to control unit wiring harness.

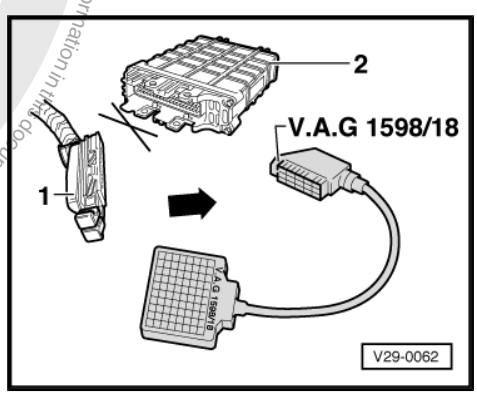

– Check lines between adapter cable (68-pin) -V.A.G 1598/18A- and 2-pin connector for open circuit according to current flow diagram. Contact 3+socket 14 Contact 1+socket 33.

Cable resistance: max. 1.5 Ω.

Engine codes AGD (with 80-pin control unit), AHG, AKU

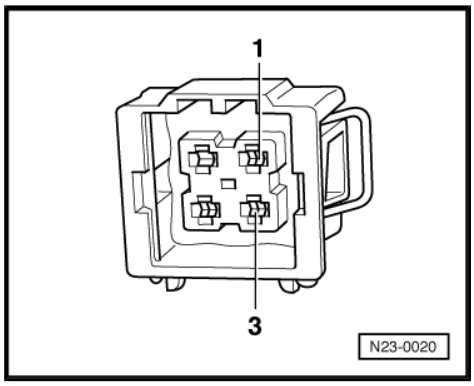

Protected by copyright. Copying for private or commercial purposes, in part or in whole, is not permitted unless authorised by Volkswagen AG. Volkswagen AG does not guarantee or accept any liability with respect to the correctness of information in this document. Copyright by Volkswagen AG.

satelettronica

– Connect adapter -V.A.G 1598/22- to control unit wiring harness.

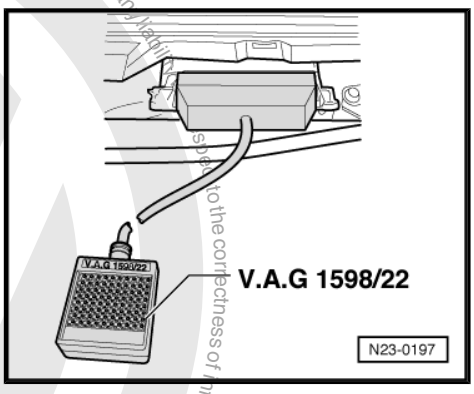

– Check lines between adapter -V.A.G 1598/22- and 2-pin connector for open circuit using current flow diagram. Contact 3 +socket 54 Contact 1+socket 70.

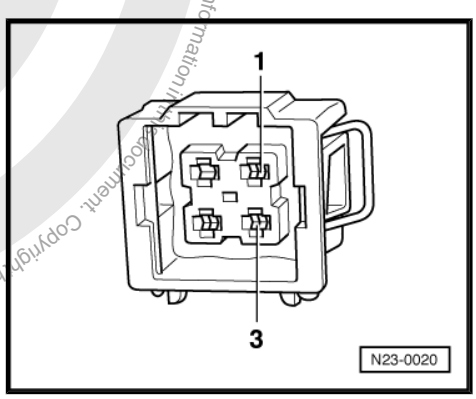

Cable resistance: max. 1.5 Ω.

Continuation for all engine codes

– Also check wiring for short to one another, short to vehicle earth and short to battery positive.

Specification: ∞ Ω.

If no fault in lines is detected:

– Renew diesel direct injection system control unit -J248- ⇒ page 96 .

3.4 Checking brake light switch -F- and brake pedal switch -F47-

Because the injection system operates with an accelerator pedal sender (potentiometer) which may be defective, the engine is regulated for reasons of safety when the brakes are operated. To do this the control unit requires signals from the brake light switch and also the brake pedal switch. This means that if the brakes are operated when the accelerator pedal is held at a constant position the engine is immediately reduced to idling speed. Incorrectly adjusted switches may lead to unrequired regulating action

Special tools and workshop equipment required

- Fault reader -V.A.G 1551- or vehicle system tester -V.A.G 1552- with diagnosis cable -V.A.G 1551/3-
- Hand multimeter -V.A.G 1526C- or multimeter -V.A.G 1715-
- Auxiliary measuring set -V.A.G 1594C-
- Current flow diagram

Check switching points for brake light switch -F- and brake pedal switch -F47-

Test procedure

– Connect fault reader -V.A.G 1551- or vehicle system tester -V.A.G 1552- and select engine electronics control unit with “address word 01”. The ignition must be switched on for this purpose. (Connect fault reader -V.A.G 1551- and select engine electronics control unit ⇒ page 2 .)

Indicated on display:

```
Rapid data transfer                HELP
Select function XX
```

– Press buttons 0 and 8 for function “Read measured value block” and confirm entry with Q button.

Protected by copyright. Copying for private or commercial purposes, in part or in whole, is not permitted unless authorised by Volkswagen AG. Volkswagen AG does not guarantee or accept any liability with respect to the correctness of information in this document. Copyright by Volkswagen AG.
satelettronica

Indicated on display:

```
Read measured value block          HELP
Input display group number XXX
```

– Press buttons 0, 0 and 6 for “Display group number 6” and confirm entry with Q button.

– Observe display in display zone 2.

Specification: 0 0 0

```
Read measured value block 6          ->
0 km/h      0 0 0      000000       255
```

– Slowly apply brake.

Specification: 0 1 1 Both displays must change from 0 to 1 at same time.

```
Read measured value block 6          ->
0 km/h      0 1 1      000000       255
```

If one or both displays do not change:

– Check switches or line connections to the switches: ⇒ Current flow diagrams, Electrical fault finding and Fitting locations

3.5 Checking clutch pedal switch -F36-

The clutch pedal switch -F36- informs the control unit whether the clutch is engaged or disengaged. If the clutch is being operated the injected quantity is momentarily reduced. This prevents engine jerks.

Special tools and workshop equipment required

- Fault reader -V.A.G 1551- or vehicle system tester -V.A.G 1552- with diagnosis cable -V.A.G 1551/3-
- Adapter cable (68-pin) -V.A.G 1598/18A- or adapter -V.A.G 1598/22-
- Hand multimeter -V.A.G 1526C- or multimeter -V.A.G 1715-
- Auxiliary measuring set -V.A.G 1594C-
- Current flow diagram

Test procedure

– Connect fault reader -V.A.G 1551- or vehicle system tester -V.A.G 1552- and select engine electronics control unit with “address word 01”. The ignition must be switched on for this purpose. (Connect fault reader -V.A.G 1551- and select engine electronics control unit ⇒ page 2 .)

Indicated on display:

```
Rapid data transfer                HELP
Select function XX
```

– Press buttons 0 and 8 for function “Read measured value block” and confirm entry with Q button.

Indicated on display:

```
Read measured value block          HELP
Input display group number XXX
```

– Press buttons 0, 0 and 6 for “Display group number 6” and confirm entry with Q button.

– Observe display in display zone 2.

Specification: 0 0 0

```
Read measured value block 6          ->
    0 km/h     0  0  0    000000    255
```

– Operate clutch pedal. The left position must change to 1.

Specification: 1 0 0

```
Read measured value block 6          ->
    0 km/h     1  0  0    000000    255
```

If the specifications are not achieved:

– Press ⇥ button.

Copyright by Volkswagen AG. Volkswagen AG doesn't guarantee or accept any liability with respect to the correctness of information in this document. Copyright by Volkswagen AG. Copying or publication or communication to other persons is not permitted unless authorised by Volkswagen AG.

satelettronica

– Press buttons 0 and 6 for function “End data transfer” and confirm entry with Q button.

– Switch off ignition.

– Pull connector off clutch pedal switch -F36- ⇒ page 42 .

– Measure resistance at switch contacts.

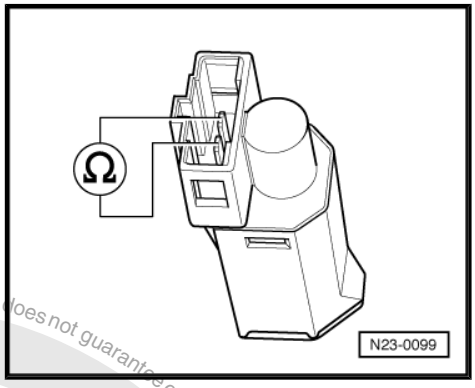

Specification:

Clutch not depressed: max. 10 Ω

Clutch pedal depressed: ∞ Ω

If the specification is not achieved:

– Renew clutch pedal switch -F36- .

If the specifications are attained:

Engine code AGD (with 68-pin control unit)

– Connect adapter cable, 68-pin -V.A.G 1598/18A- to control unit wiring harness.

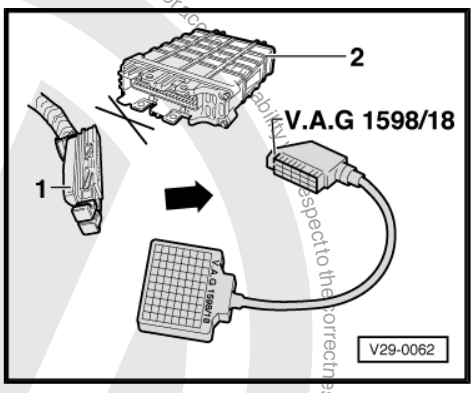

– Check lines between adapter cable (68-pin) -V.A.G 1598/18A- and connector for open circuit according to current flow diagram. Contact 1 + socket 33 Contact 2 + socket 17.

Cable resistance: max. 1.5 Ω.

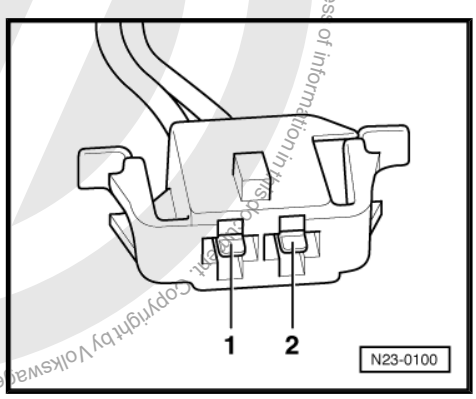

Engine codes AGD (with 80-pin control unit), AHG, AKU

– Connect adapter -V.A.G 1598/22- to control unit wiring harness.

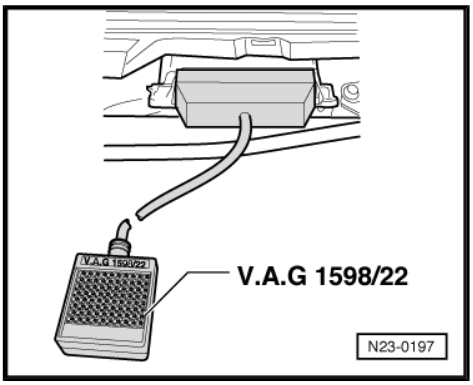

Protected by copyright. Copying for private or commercial purposes, in part or in whole, is not permitted unless authorised by Volkswagen AG. Volkswagen AG does not guarantee or accept any liability with respect to the correctness of information in this document. Copyright by Volkswagen AG.
satelettronica

– Check lines between adapter -V.A.G 1598/22- and connector for open circuit according to current flow diagram. Contact 1 + socket 1 Contact 1 + socket 28 Contact 2 + socket 46.

Cable resistance: max. 1.5 Ω.

Continuation for all engine codes

– Also check wiring for short to one another, short to vehicle earth and short to battery positive.

Specification: ∞ Ω.

If no fault in lines is detected:

– Renew diesel direct injection system control unit -J248- ⇒ page 96 .

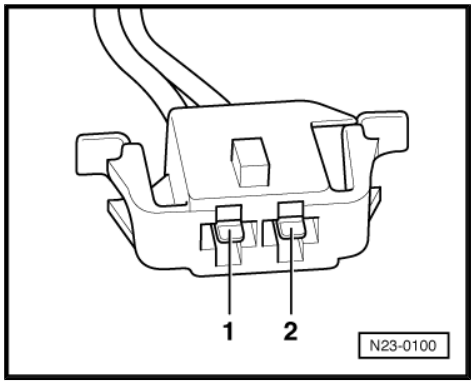

3.6 Checking intake air temperature sender -G42-

Note

In the event of a fault message, fault reader -V.A.G 1551- display shows fault code 00527 for intake manifold temperature sender -G72- .

Special tools and workshop equipment required

- Fault reader -V.A.G 1551- or vehicle system tester -V.A.G 1552- with diagnosis cable -V.A.G 1551/3-
- Adapter cable (68-pin) -V.A.G 1598/18A- or adapter -V.A.G 1598/22-
- Hand multimeter -V.A.G 1526C- or multimeter -V.A.G 1715-
- Auxiliary measuring set -V.A.G 1594C-
- Current flow diagram

Test procedure

– Connect fault reader -V.A.G 1551- or vehicle system tester -V.A.G 1552- and select engine electronics control unit with “address word 01”. Engine must be idling. (Connect fault reader -V.A.G 1551- and select engine electronics control unit ⇒ page 2.)

Indicated on display:

```
Rapid data transfer                    HELP
Select function XX
```

– Press buttons 0 and 8 for function “Read measured value block” and confirm entry with Q button.

Indicated on display:

```
Read measured value block              HELP
Input display group number XXX
```

– Press buttons 0, 0 and 7 for “Display group number 7” and confirm entry with Q button.

Indicated on display:

```
Read measured value block 7             ->
15.4°C              15.9°C         16.7°C
```

– If no realistic display appears in display zone 3 or a substitute temperature of 136.8°C is displayed, check intake air temperature sender -G42- and line connections to sender as follows:

– Press → button.

Protected by copyright. Copyright by Volkswagen AG. Volkswagen AG does not guarantee or accept any liability with respect to the correctness of information in this document. Copying for private or commercial purposes, in whole or in part, is not permitted unless authorised by Volkswagen AG.
satelettronica

– Press buttons 0 and 6 for function “End data transfer” and confirm entry with Q button.

– Switch off ignition.

– Remove connector from intake air temperature sender -G42- -arrow-.

– Measure resistance between sender contacts.

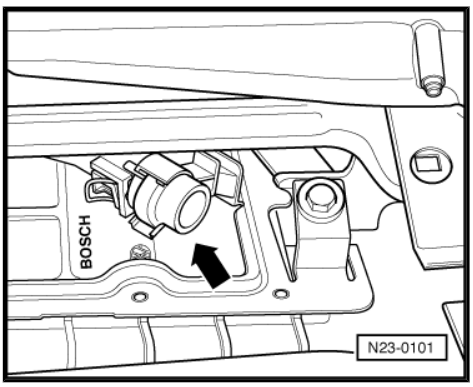

Specification see diagram.

Scale A shows resistance values for temperature range 0..50°C and scale B the values for temperature range 50..100°C.

Examples:

♦ 30 °C corresponds to a resistance of 1500..2000 Ω

♦ 80 °C corresponds to a resistance of 275..375 Ω

If the specification is not achieved:

– Renew intake air temperature sender -G42- .

If the specification is attained:

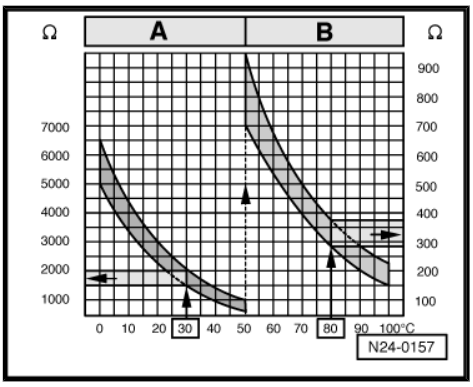

Engine code AGD (with 68-pin control unit)

– Connect adapter cable, 68-pin -V.A.G 1598/18A- to control unit wiring harness.

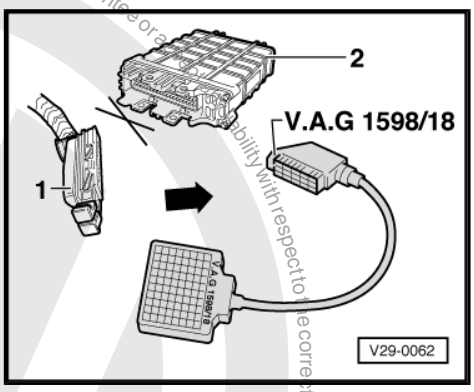

– Check lines between adapter cable (68-pin) -V.A.G 1598/18A- and connector for open circuit according to current flow diagram. Contact 1 + socket 64 Contact 2 + socket 33.

Cable resistance: max. 1.5 Ω.

Engine codes AGD (with 80-pin control unit), AHG, AKU

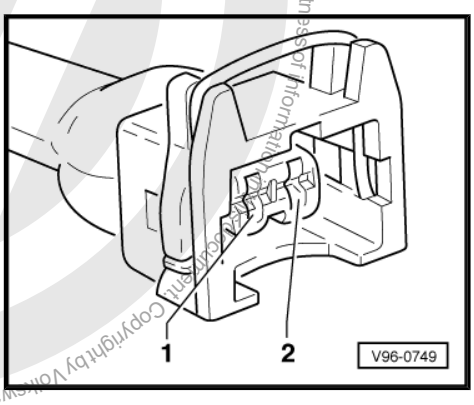

Protected by copyright. Copying for private or commercial purposes, in part or in whole, is not permitted unless authorised by Volkswagen AG. Volkswagen AG does not guarantee or assume any liability with respect to the correctness of information. Copyright by Volkswagen AG.
satelettronica

– Connect adapter -V.A.G 1598/22- to control unit wiring harness.

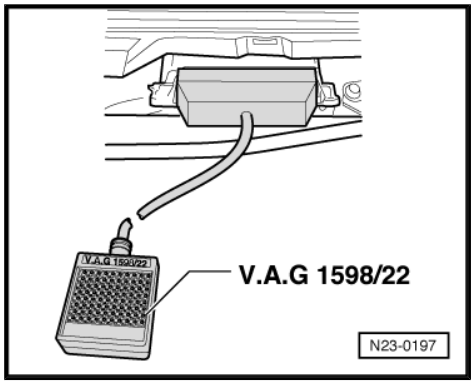

– Check lines between adapter -V.A.G 1598/22- and connector for open circuit according to current flow diagram. Contact 1 + socket 13 Contact 2 + socket 25.

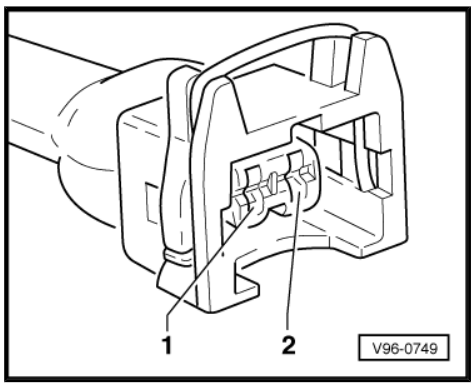

Cable resistance: max. 1.5 Ω.

Continuation for all engine codes

– Also check wiring for short to one another, short to vehicle earth and short to battery positive.

Specification: ∞ Ω.

If no fault in lines is detected:

– Renew diesel direct injection system control unit -J248- ⇒ page 96 .

3.7 Checking voltage supply for diesel direct injection system

Special tools and workshop equipment required

- ♦ Adapter cable (68-pin) -V.A.G 1598/18A- or adapter -V.A.G 1598/22-
- ♦ Hand multimeter -V.A.G 1526C- or multimeter -V.A.G 1715-
- ♦ Auxiliary measuring set -V.A.G 1594C-
- ♦ Current flow diagram

Test prerequisites:

- Battery voltage OK.

Test procedure

– Switch off ignition.

Engine code AGD (with 68-pin control unit)

– Connect adapter cable, 68-pin -V.A.G 1598/18A- to control unit wiring harness.

– Bridge sockets 42+46 using auxiliary cables from auxiliary measuring set -V.A.G 1594C- .

– Measure voltage between following sockets: 45+1, 68+1, 23 +1 and 23+24.

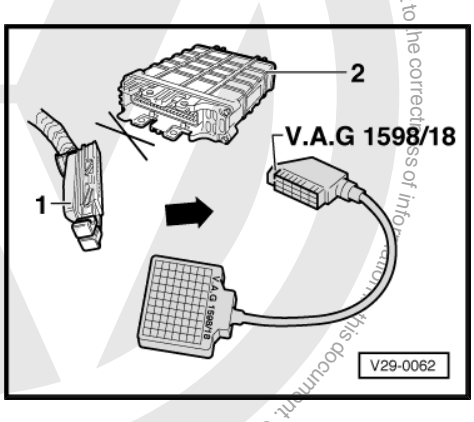

Specification: approx. battery voltage

Engine codes AGD (with 80-pin control unit), AHG, AKU

Protected by copyright. Copying for private or commercial purposes, in part or in whole, is not permitted unless authorised by Volkswagen AG. Volkswagen AG does not guarantee or accept any liability with respect to the correctness of information in this document. Copyright by Volkswagen AG.
satelettronica

– Connect adapter -V.A.G 1598/22- to control unit wiring harness.

– Bridge sockets 33+1 using auxiliary cables from auxiliary measuring set -V.A.G 1594C- .

– Measure voltage between following sockets: 2+1, 28+1, 27+2 and 28+27.

Specification: approx. battery voltage

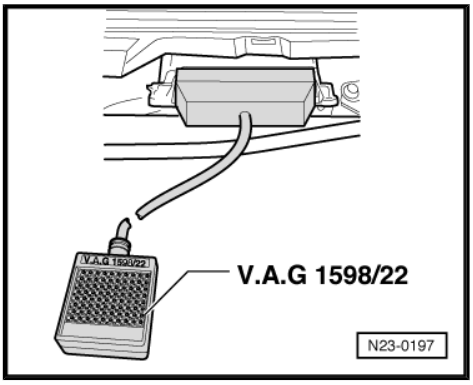

Continuation for all engine codes

If the specification is not achieved:

– Check terminal 30 voltage supply relay -J317- .

– Check cable connections for open circuit, short circuit and transfer resistance at contacts according to current flow diagram.

If no fault is found in wiring and relay:

– Renew diesel direct injection system control unit -J248- ⇒ page 96 .

3.8 Checking fuel temperature sender -G81-

Special tools and workshop equipment required

- Adapter cable (68-pin) -V.A.G 1598/18A- or adapter -V.A.G 1598/22-
- Hand multimeter -V.A.G 1526C- or multimeter -V.A.G 1715-
- Auxiliary measuring set -V.A.G 1594C-
- Current flow diagram

Test procedure

– Connect fault reader -V.A.G 1551- or vehicle system tester -V.A.G 1552- and select engine electronics control unit with “address word 01”. Engine must be idling. (Connecting fault reader and selecting engine electronics control unit ⇒ page 2 .)

Indicated on display:

```
Rapid data transfer                    HELP
Select function XX
```

– Press buttons 0 and 8 for function “Read measured value block” and confirm entry with Q button.

Indicated on display:

```
Read measured value block              HELP
Input display group number XXX
```

– Press buttons 0, 0 and 7 for “Display group number 7” and confirm entry with Q button.

Indicated on display:

```
Read measured value block 7             ->
15.4°C              15.9°C          16.7°C
```

– If no realistic display appears in display zone 1 or a substitute temperature of -5.4°C is displayed, check fuel temperature sender -G81- and line connections to sender as follows:

– Press ↵ button.

– Press buttons 0 and 6 for function “End data transfer” and confirm entry with Q button.

– Switch off ignition.

satelettronica
Protected copyright. Copying for private or commercial purposes, in part or in whole, is not permitted unless authorised by Volkswagen AG. Volkswagen AG does not guarantee or accept any liability with respect to the correctness of information in this document. copyright by Volkswagen AG.

Engine code AGD (with 68-pin control unit)

– Disconnect connector for fuel temperature sender -G81- (connector to injection pump quantity adjuster).

– Measure sender resistance at connector contacts 4+7.

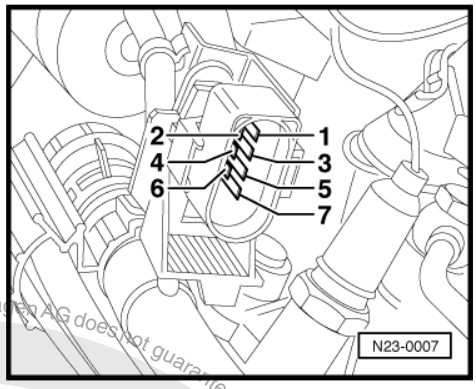

Engine codes AGD (with 80-pin control unit), AHG, AKU

– Disconnect 10-pin connector for fuel temperature sender -G81- (connector to injection pump quantity adjuster).

– Measure sender resistance at connector contacts 4+7.

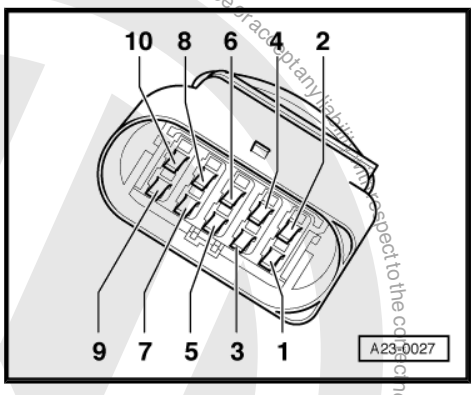

Continuation for all engine codes

Specification see diagram

Scale A shows resistance values for temperature range 0..50°C and scale B the values for temperature range 50..100°C.

Examples:

- ♦ 30 °C corresponds to a resistance of 1500..2000 Ω
- ♦ 80 °C corresponds to a resistance of 275..375 Ω

If the specification is not achieved:

– Renew injection pump ⇒ page 49 .

If the specification is attained:

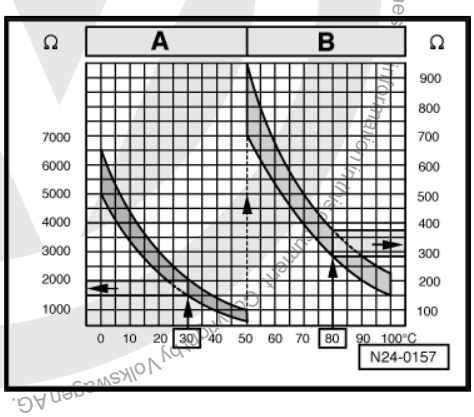

Engine code AGD (with 68-pin control unit)

– Connect adapter cable, 68-pin -V.A.G 1598/18A- to control unit wiring harness.

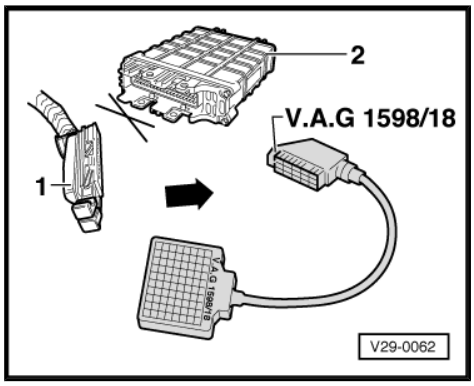

Protected by copyright. Copying for private or commercial purposes, in part or in whole, is not permitted unless authorised by Volkswagen AG. Volkswagen AG does not guarantee or accept any liability with respect to the correctness of information. Copyright by Volkswagen AG.

satelettronica

– Check lines between adapter cable (68-pin) -V.A.G 1598/18A- and connector for open circuit according to current flow diagram. Contact 7+socket 63 Contact 4+socket 33.

Cable resistance: max. 1.5 Ω.

Engine codes AGD (with 80-pin control unit), AHG, AKU

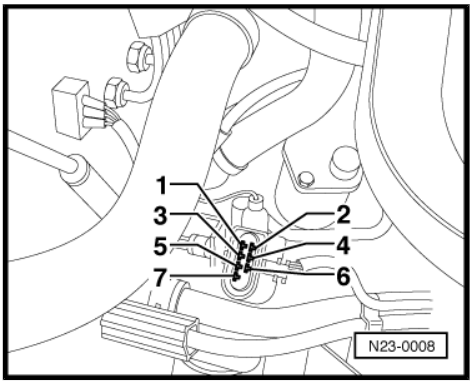

– Connect adapter -V.A.G 1598/22- to control unit wiring harness.

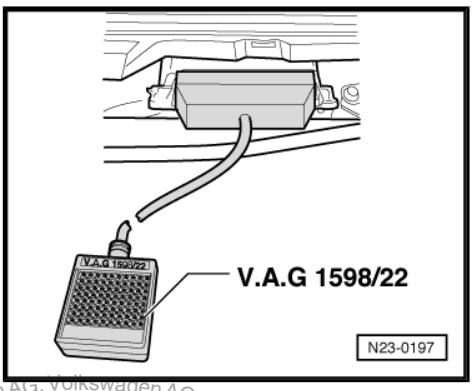

– Check lines between adapter -V.A.G 1598/22- and connector for open circuit according to current flow diagram. Contact 7 +socket 53 Contact 4+socket 76.

Cable resistance: max. 1.5 Ω.

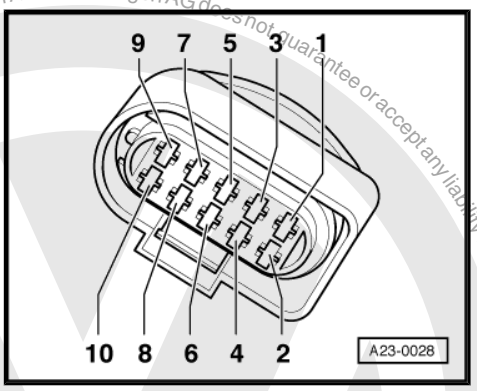

Continuation for all engine codes

– Also check wiring for short to one another, short to vehicle earth and short to battery positive.

Specification: ∞ Ω.

If no fault in lines is detected:

– Renew diesel direct injection system control unit -J248- ⇒ page 96 .

3.9 Checking modulating piston movement sender -G149- and metering adjuster -N146-

The metering adjuster -N146- is an electromagnetic swivelling positioner which is actuated by the control unit via a specific duty cycle. The eccentric shaft on the metering adjuster -N146- moves the modulating piston on the high-pressure piston and thereby determines the quantity of fuel injected.

The modulating piston movement sender -G149- informs the control unit of the position of the quantity adjuster -N146- and therefore stipulates the amount injected.

Special tools and workshop equipment required

- Fault reader -V.A.G 1551- or vehicle system tester -V.A.G 1552- with diagnosis cable -V.A.G 1551/3-
- Adapter cable (68-pin) -V.A.G 1598/18A- or adapter -V.A.G 1598/22-
- Hand multimeter -V.A.G 1526C- or multimeter -V.A.G 1715-

Protected by copyright. Copying for private or commercial purposes, in part or in whole, is not permitted unless authorised by Volkswagen AG. Volkswagen AG does not guarantee or accept any liability with respect to the correctness of information in this document. Copyright by Volkswagen AG.
satelettronica

- Auxiliary measuring set -V.A.G 1594C-
- Current flow diagram

Test procedure

– Connect fault reader -V.A.G 1551- or vehicle system tester -V.A.G 1552- and select engine electronics control unit with “address word 01”. Engine must be idling. (Connect fault reader -V.A.G 1551- and select engine electronics control unit ⇒ page 2 .)

Indicated on display:

```
Rapid data transfer                    HELP
Select function XX
```

– Press buttons 0 and 8 for function “Read measured value block” and confirm entry with Q button.

Indicated on display:

```
Read measured value block              HELP
Input display group number XXX
```

– Press buttons 0, 0 and 1 for “Display group number 1” and confirm entry with Q button.

Indicated on display:

```
Read measured value block 1             ->
840 rpm   6.5 mg/s    1.480 V    87.3°C
```

– Check coolant temperature in display zone 4. Specification: At least 85°C

Continue with check only if coolant temperature is achieved.

– Check voltage of modulating piston movement sender -G149- in display zone 3.

Specification:

Engine code AGD: 1.400…1.800 V

Engine code AHG: 1.500…2.000 V

Engine code AKU: 1.500…2.100 V

```
Read measured value block 1             ->
840 rpm   6.5 mg/s    1.480 V    87.3°C
```

– If specification is not achieved, check modulating piston movement sender -G149- and metering adjuster -N146- as described in following:

3.9.1 Checking modulating piston movement sender -G149-

– Press → button.

– Press buttons 0 and 6 for function “End data transfer” and confirm entry with Q button.

– Switch off ignition.

Protected by copyright. Copyright by Volkswagen AG. Copyright by Volkswagen AG. Volkswagen AG does not guarantee or accept any liability with respect to the correctness of information in this document. Copyright by Volkswagen AG. It is not permitted to use or communicate the content of this document to third parties, in part or in whole, for commercial purposes, unless authorised by Volkswagen AG.
satelettronica

Engine code AGD (with 68-pin control unit)

– Disconnect connector for fuel temperature sender -G81- (connector to injection pump quantity adjuster).

– Measure resistance between connector contacts 1 + 2 and 2 + 3.

Specification: 5…7 Ω

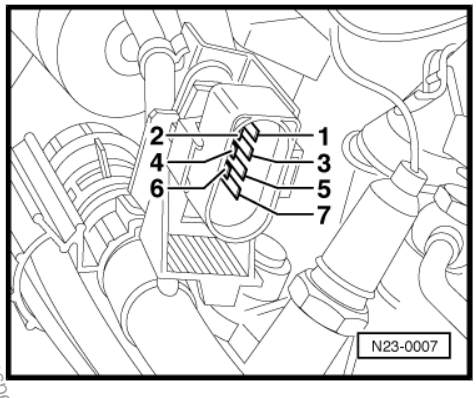

Engine codes AGD (with 80-pin control unit), AHG, AKU

– Disconnect 10-pin connector for fuel temperature sender -G81- (connector to injection pump quantity adjuster).

– Measure resistance between connector contacts 1 + 2 and 2 + 3.

Specification: 5…7 Ω

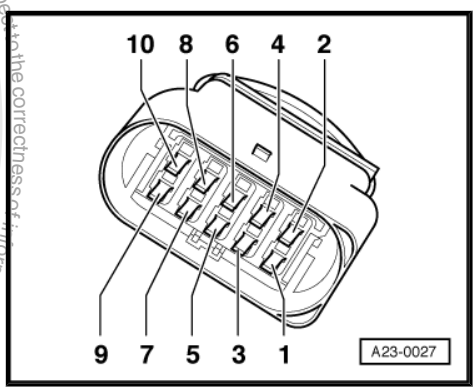

Continuation for all engine codes

If the specification is not achieved:

– Renew injection pump ⇒ page 49 .

If the specification is attained:

Engine code AGD (with 68-pin control unit)

– Connect adapter cable, 68-pin -V.A.G 1598/18A- to control unit wiring harness.

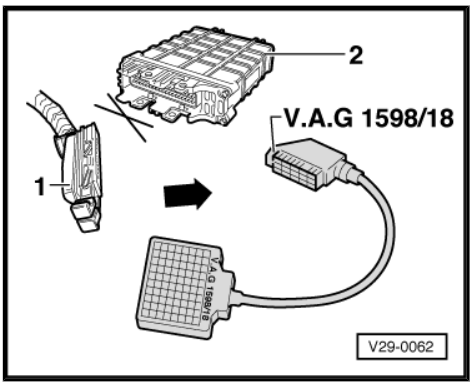

– Check lines between adapter cable (68-pin) -V.A.G 1598/18A- and connector for open circuit according to current flow diagram. Contact 1 + socket 29 Contact 2 + socket 7 Contact 3 + socket 52.

Cable resistance: max. 1.5 Ω.

Engine codes AGD (with 80-pin control unit), AHG, AKU

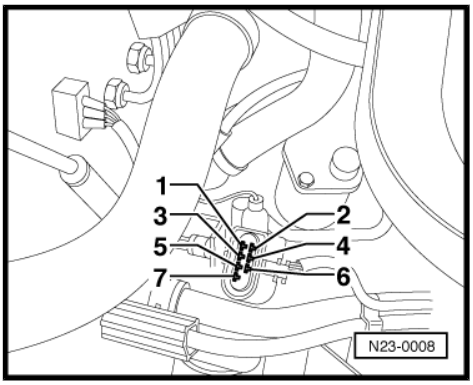

Protected by copyright. Copying for private or commercial purposes, in part or in whole, is not permitted unless authorised by Volkswagen AG. Volkswagen AG does not guarantee or accept any liability with respect to the correctness of information in this document. Copyright by Volkswagen AG.
satelettronica

– Connect adapter -V.A.G 1598/22- to control unit wiring harness.

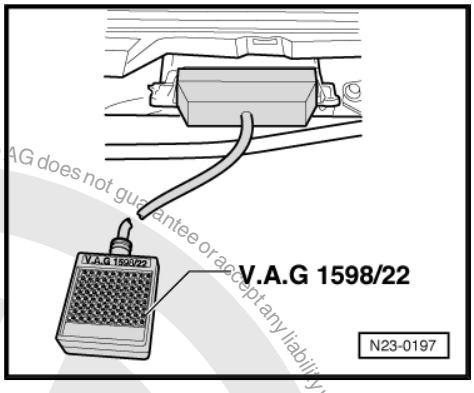

– Check lines between adapter -V.A.G 1598/22- and connector for open circuit according to current flow diagram. Contact 1 + socket 56 Contact 2 + socket 57 Contact 3 + socket 64.

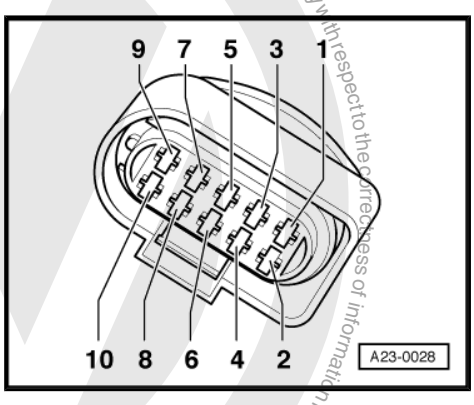

Cable resistance: max. 1.5 Ω.

Continuation for all engine codes

– Also check wiring for short to one another, short to vehicle earth and short to battery positive.

Specification: ∞ Ω.

If no fault in lines is detected:

– Renew diesel direct injection system control unit -J248- ⇒ page 96 .

3.9.2 Checking metering adjuster -N146-

– Press ⇨ button.

– Press buttons 0 and 6 for function “End data transfer” and confirm entry with Q button.

– Switch off ignition.

Engine code AGD (with 68-pin control unit)

– Disconnect connector for metering adjuster -N146- (connector to injection pump quantity adjuster).

– Measure resistance between connector contacts 5+6.

Specification: 0.5…2.5 Ω

Engine codes AGD (with 80-pin control unit), AHG, AKU

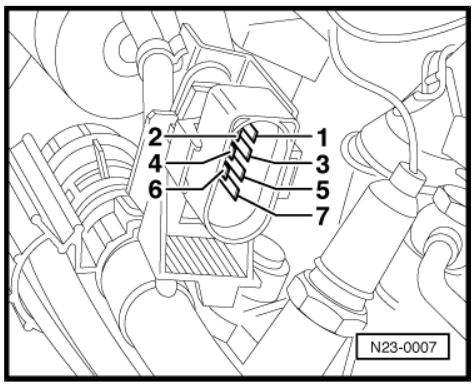

Protected by copyright. Copying for private or commercial purposes, in part or in whole, is not permitted unless authorised by Volkswagen AG. Volkswagen AG does not guarantee or accept any liability with respect to the correctness of information in this document. Copyright by Volkswagen AG.
satelettronica

– Disconnect 10-pin connector for metering adjuster -N146- (connector to injection pump quantity adjuster).

– Measure resistance between connector contacts 5+6.

Specification: 0.5…2.5 Ω

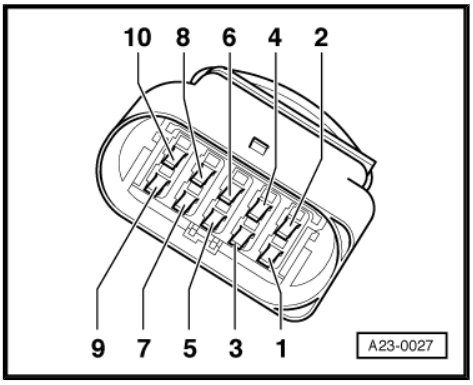

Continuation for all engine codes

If the specification is not achieved:

– Renew injection pump ⇒ page 49 .

If the specification is attained:

Engine code AGD (with 68-pin control unit)

– Connect adapter cable, 68-pin -V.A.G 1598/18A- to control unit wiring harness.

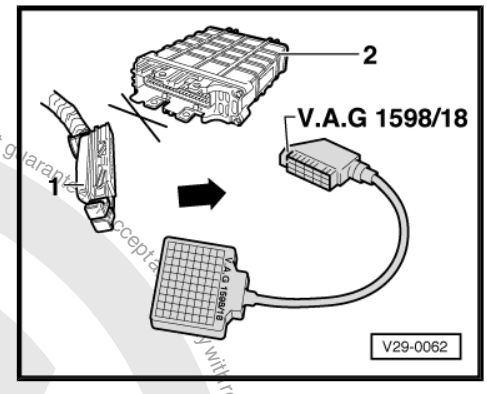

– Check lines between adapter cable (68-pin) -V.A.G 1598/18A- and connector for open circuit according to current flow diagram. Contact 5+ sockets 23, 45 and 68 Contact 6+ sockets 4, 5 and 49.

Cable resistance: max. 1.5 Ω.

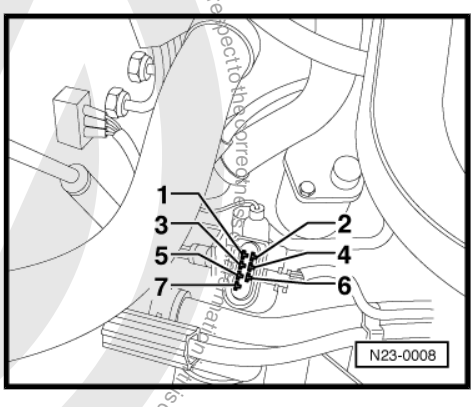

Engine codes AGD (with 80-pin control unit), AHG, AKU

– Connect adapter -V.A.G 1598/22- to control unit wiring harness.

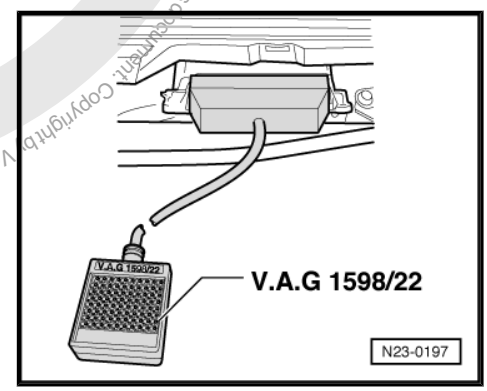

Protected by copyright. Copying for private or commercial purposes, in part or in whole, is not permitted unless authorised by Volkswagen AG. Volkswagen AG does not guarantee or accept any liability with respect to the correctness and completeness of this document. Copyright by Volkswagen AG.
satelettronica

– Check lines between adapter -V.A.G 1598/22- and connector for open circuit according to current flow diagram. Contact 5+ sockets 2 and 28 Contact 6+ sockets 59, 66 and 80.

Cable resistance: max. 1.5 Ω.

Continuation for all engine codes

– Also check wiring for short to one another, short to vehicle earth and short to battery positive.

Specification: ∞ Ω.

If no fault in lines is detected:

– Renew diesel direct injection system control unit -J248- ⇒ page 96 .

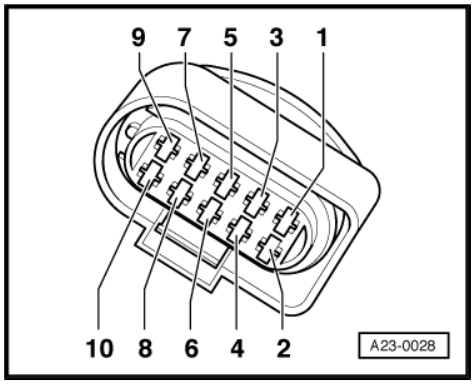

3.10 Checking needle lift sender -G80-

The needle lift sender signal is required to determine the commencement of injection. If it fails, the commencement of injection switches to open-loop control (depending on engine speed and load). During normal operation, the commencement of injection is controlled by a closed-loop function (depending on engine speed, load and temperature).

Special tools and workshop equipment required

- Adapter cable (68-pin) -V.A.G 1598/18A- or adapter -V.A.G 1598/22-
- Hand multimeter -V.A.G 1526C- or multimeter -V.A.G 1715-
- Auxiliary measuring set -V.A.G 1594C-
- Current flow diagram

Test procedure

– Switch off ignition.

– Disconnect connector for needle lift sender -G80- ⇒ page 42 .

– Measure resistance between connector contacts.

Specification: 80…120 Ω

If the specification is not achieved:

– Renew cylinder 3 injector with needle lift sender -G80- .

If the specification is attained:

Engine code AGD (with 68-pin control unit)

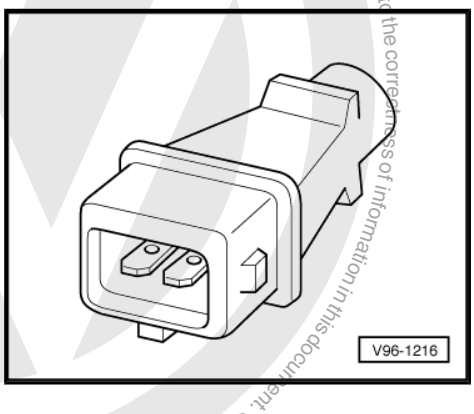

Protected by copyright. Copying for private or commercial purposes, in part or in whole, is not permitted unless authorised by Volkswagen AG. Volkswagen AG does not guarantee or accept any liability with respect to the correctness of information in this document. Copyright by Volkswagen AG.
satelettronica

– Connect adapter cable, 68-pin -V.A.G 1598/18A- to control unit wiring harness.

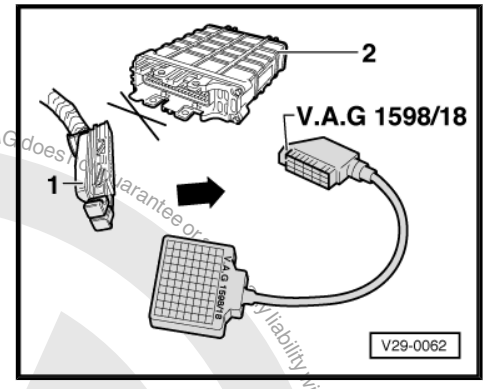

– Check lines between adapter cable (68-pin) -V.A.G 1598/18A- and connector for open circuit according to current flow diagram. Contact 1 + socket 12 Contact 2 + socket 11.

Cable resistance: max. 1.5 Ω.

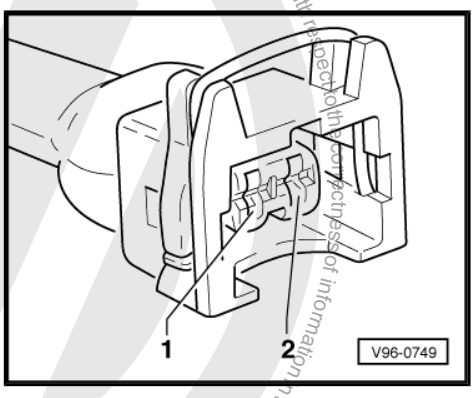

Engine codes AGD (with 80-pin control unit), AHG, AKU

– Connect adapter -V.A.G 1598/22- to control unit wiring harness.

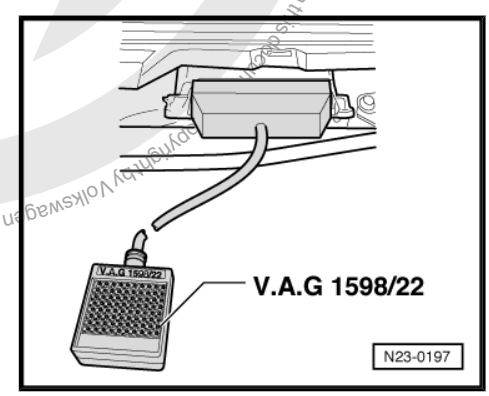

– Check lines between adapter -V.A.G 1598/22- and connector for open circuit according to current flow diagram. Contact 1 + socket 62 Contact 2 + socket 55.

Cable resistance: max. 1.5 Ω.

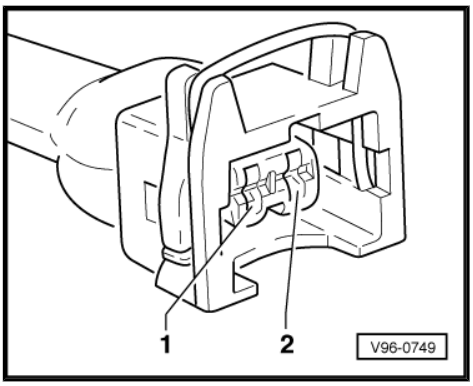

Continuation for all engine codes

– Also check wiring for short to one another, short to vehicle earth and short to battery positive.

Specification: ∞ Ω.

If no fault in lines is detected:

– Renew diesel direct injection system control unit -J248- ⇒ page 96 .

3.11 Checking injection timing control range

Special tools and workshop equipment required

- Fault reader -V.A.G 1551- or vehicle system tester -V.A.G 1552- with diagnosis cable -V.A.G 1551/3-
- Adapter cable (68-pin) -V.A.G 1598/18A- or adapter -V.A.G 1598/22-

Protected by copyright. Copying for private or commercial purposes, part or in whole is not permitted unless authorised by Volkswagen AG. Volkswagen AG does not guarantee or assume any liability with respect to the correctness of information in this document. Copyright by Volkswagen AG.

satelettronica

- Hand multimeter -V.A.G 1526C- or multimeter -V.A.G 1715-
- Auxiliary measuring set -V.A.G 1594C-
- Current flow diagram

Engine codes AGD (with 68-pin control unit), AHG

Engine codes AGD (with 80-pin control unit), AKU ⇒ page 85

The control range of the injection timing adjuster can be checked with the aid of the final control test and the simultaneous call-up of measured value block 04. To do this the control element for commencement of injection valve -N108- must be activated and the final control test then exited by pressing button “C”. Using this procedure the commencement of injection valve -N108- remains pulsed so that the control range of the injection timing adjuster can be read with the aid of measured value block 04 (display zone 3).

Test procedure

– Connect fault reader -V.A.G 1551- or vehicle system tester -V.A.G 1552- and select engine electronics control unit with “address word 01”. Engine must be idling. (Connecting fault reader and selecting engine electronics control unit ⇒ page 2 .)

Indicated on display:

```
Rapid data transfer                    HELP
Select function XX
```

– Press buttons 0 and 3 for function “Final control diagnosis”.

Indicated on display:

```
Rapid data transfer                       Q
03-Final control diagno-
sis
```

Note

The individual control elements are activated for 30 seconds only. In the subsequent procedure you must make several entries within this period on fault reader -V.A.G 1551- and must also read off measured values. Therefore read through the subsequent steps first and become conversant with the procedures before starting tests.

– Confirm entry with Q button.

Indicated on display:

```
Final control diagnosis                  ->
Commencement of injection valve N108
```

– Press the C button.

– Press buttons 0 and 8 for function “Read measured value block” and confirm entry with Q button.

Indicated on display:

```
Read measured value block              HELP
Input display group number XXX
```

– Press buttons 0, 0 and 4 for “Display group number 4” and confirm entry with Q button.

Appears on display

```
Read measured value block 4              ->
840 rpm   0.9° BTDC    0.9° BTDC      3%
```

The displays in display zones 3 and 4 must fluctuate within following control range:

– Specification in display zone 3, lower range 1° ATDC…5.0° BTDC, upper range 14.0…17.4° BTDC

Protected by copyright. Copying for private or commercial purposes, in part or in whole, is not permitted unless authorised by Volkswagen AG. Volkswagen AG does not guarantee or accept any liability with respect to the correctness of information in this document. Copyright by Volkswagen AG.

satelettronica

– Specification in display zone 4, lower range 2...5.0%, upper range 90...95%

The measured values which are displayed vary extensively due to the sluggishness of the fault reader -V.A.G 1551- display. Therefore, ensure that the lowest numerical value in display zone 3 lies between 1.0 and 5.0 and the highest between 14.0 and 17.4, and lowest numerical value in display zone 4 lies between 2 and 5 and the highest value between 90 and 95.

If the specifications are not achieved:

– Press [→] button.

– Press buttons [0] and [6] for function “End data transfer” and confirm entry with [Q] button.

– Switch off ignition.

– Check commencement of injection valve -N108- ⇒ page 86 .

Engine codes AGD (with 80-pin control unit), AKU

Checking the function of the injection timing control range is undertaken in function 04 (Basic settings). Using this procedure, the commencement of injection valve -N108- is pulsed so that the extreme values for advanced (early) and retarded (late) positions for the injection timing device can be read in display zone 3 of measured value block 004.

Test procedure

– Connect fault reader -V.A.G 1551- or vehicle system tester -V.A.G 1552- and select engine electronics control unit with “address word 01”. Engine must be idling. (Connect fault reader -V.A.G 1551- and select engine electronics control unit ⇒ page 2 .)

Indicated on display:

```
Rapid data transfer                    HELP
Select function XX
```

– Press buttons [0] and [4] for function “Initiate basic settings” and confirm entry with [Q] button.

Indicated on display:

```
Basic setting                          HELP
Input display group number XXX
```

– Press buttons [0], [0] and [4] for “Display group number 4” and confirm entry with [Q] button.

Indicated on display:

```
System in basic setting 4              ->
   861 rpm   advanced  7.9° BTDC      47%
```

Specification in display zone 3: 6.5...9.5° BTDC

After approx. 10 seconds the timing device is moved to the retarded (late) position.

Indicated on display:

```
System in basic setting 4              ->
   861 rpm   retarded  4.4° BTDC      32%
```

Specification in display zone 3: 2.5...5.5° BTDC

If the specifications are not achieved:

– Press [→] button.

– Press buttons [0] and [6] for function “End data transfer” and confirm entry with [Q] button.

– Switch off ignition.

– Check commencement of injection valve -N108- ⇒ page 86 .

Copyright by Volkswagen AG. Volkswagen AG does not guarantee or accept any liability with respect to the correctness of information in this document. Copyright by Volkswagen AG. Copying for private or commercial purposes, in part or in whole, is not permitted unless authorised by Volkswagen AG.
satelettronica

3.11.1 Checking commencement of injection valve -N108-

Engine code AGD (with 68-pin control unit)

– Disconnect connector from injection pump ⇒ page 42 .

– Measure resistance between connector contacts 2+3.

Specification: 12…20 Ω

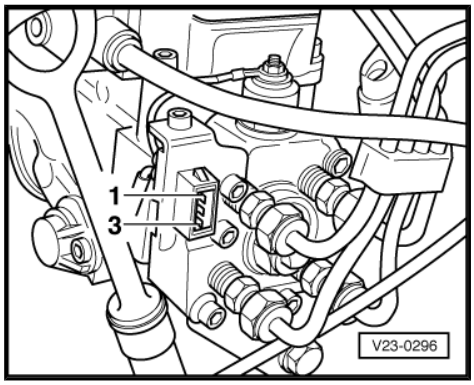

Engine codes AGD (with 80-pin control unit), AHG, AKU

– Disconnect 10-pin connector ⇒ Installation location overview, page ⇒ page 42 .

– Measure resistance between connector contacts 9+10.

Specification: 12…20 Ω

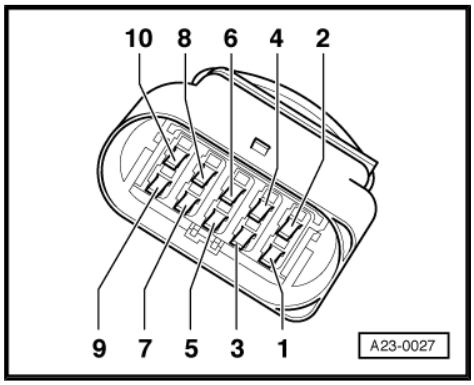

Continuation for all engine codes

If the specification is not achieved:

– Renew commencement of injection valve -N108- ⇒ Item 18 (page 44)

If the specification is attained:

Engine code AGD (with 68-pin control unit)

– Connect adapter cable, 68-pin -V.A.G 1598/18A- to control unit wiring harness.

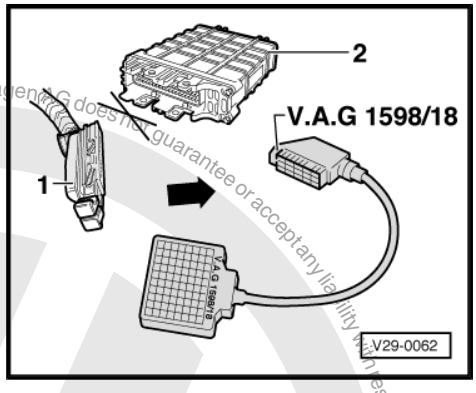

– Check lines between adapter cable (68-pin) -V.A.G 1598/18A- and 3-pin connector for open circuit according to current flow diagram. Contact 2+socket 51 Contact 3+socket 68.

Cable resistance: max. 1.5 Ω.

Engine codes AGD (with 80-pin control unit), AHG, AKU

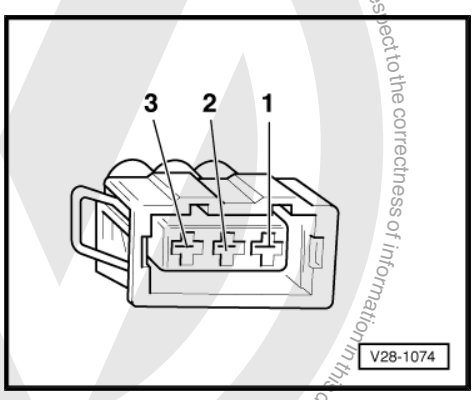

Protected by copyright. Copying for private or commercial purposes, in part or in whole, is not permitted unless authorised by Volkswagen AG. Volkswagen AG does not guarantee or accept any liability with respect to the correctness of information in this document. Copyright by Volkswagen AG.

satelettronica

– Connect adapter -V.A.G 1598/22- to control unit wiring harness.

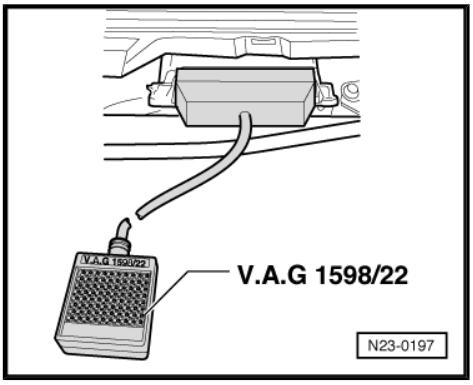

– Check lines between adapter -V.A.G 1598/22- and 10-pin connector for open circuit according to current flow diagram. Contact 9+socket 79 Contact 10+sockets 2+28.

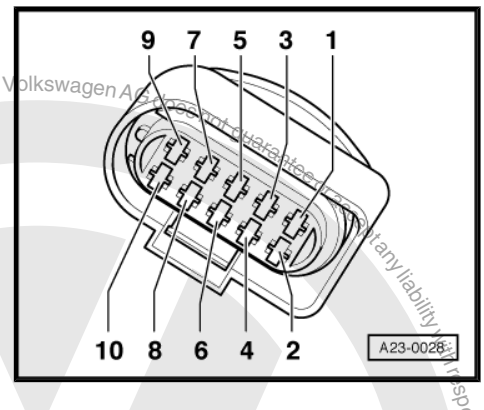

Cable resistance: max. 1.5 Ω.

Continuation for all engine codes

– Also check wiring for short to one another, short to vehicle earth and short to battery positive.

Specification: ∞ Ω.

If no fault in lines is detected:

– Renew diesel direct injection system control unit -J248- ⇒ page 96 .

3.12 Checking throttle valve

Special tools and workshop equipment required

- Adapter cable (68-pin) -V.A.G 1598/18A- or adapter -V.A.G 1598/22-
- Hand multimeter -V.A.G 1526C- or multimeter -V.A.G 1715-
- Auxiliary measuring set -V.A.G 1594C-
- Current flow diagram

Test procedure

– Switch off ignition.

– Pull connector from throttle valve positioner -V60- ⇒ page 42 .

– Measure resistance between throttle valve positioner -V60- contacts.

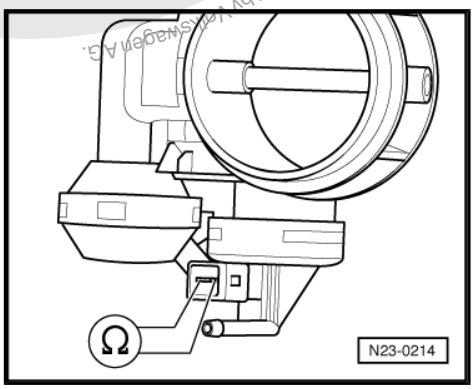

Specification: 25…45 Ω

If the specification is not achieved:

– Renew throttle valve positioner -V60- .

If the specification is attained:

– Switch on ignition.

Protected by copyright. Copying for private or commercial purposes, in part or in whole, is not permitted unless authorised by Volkswagen AG. Volkswagen AG does not guarantee or accept any liability with respect to the correctness of information in this document. Copyright by Volkswagen AG.
satelettronica

– Measure throttle valve positioner -V60- supply voltage at connector contact 1 and at engine earth.

Specification: approx. battery voltage

If the specification is not achieved:

– Switch off ignition.

Engine code AGD (with 68-pin control unit)

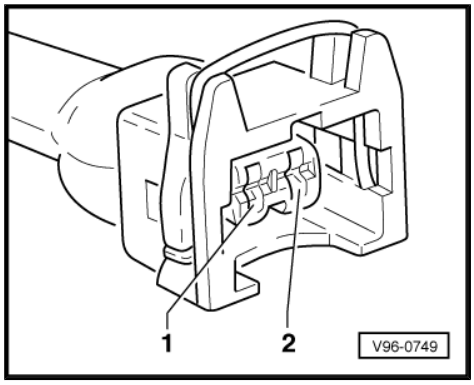

– Connect adapter cable, 68-pin -V.A.G 1598/18A- to control unit wiring harness.

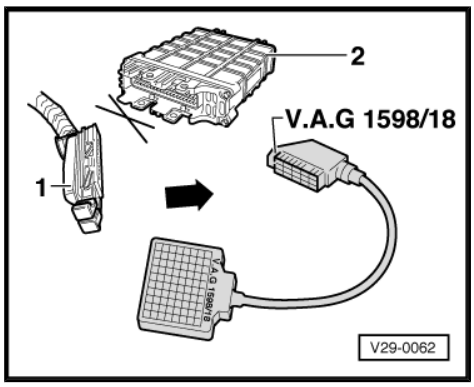

– Check lines between adapter cable (68-pin) -V.A.G 1598/18A- and connector for open circuit according to current flow diagram. Contact 1 + socket 68 Contact 2 + socket 47.

Cable resistance: max. 1.5 Ω.

Engine codes AGD (with 80-pin control unit), AHG, AKU

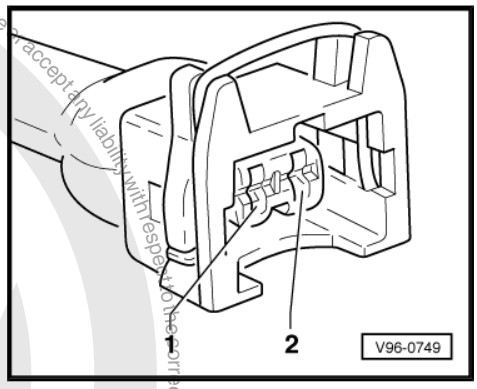

– Connect adapter -V.A.G 1598/22- to control unit wiring harness.

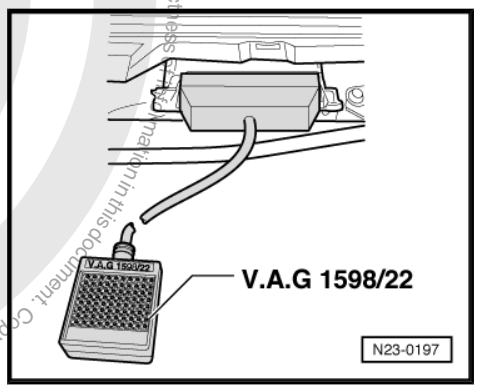

Protected by copyright. Copying for private or commercial purposes, in part or in whole, is not permitted unless authorised by Volkswagen AG. Volkswagen AG does not guarantee or accept any liability with respect to the correctness and completeness of information in this document. Copyright by Volkswagen AG.
satelettronica

– Check lines between adapter -V.A.G 1598/22- and connector for open circuit according to current flow diagram. Contact 1 +sockets 2+28 Contact 2+socket 15.

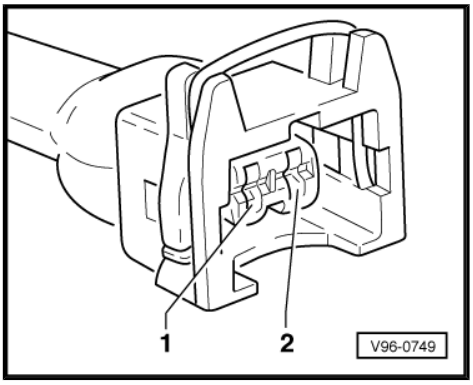

Cable resistance: max. 1.5 Ω.

Continuation for all engine codes

– Also check wiring for short to one another, short to vehicle earth and short to battery positive.

Specification: ∞ Ω.

If no fault in lines is detected:

– Renew diesel direct injection system control unit -J248- ⇒ page 96 .

3.13 Checking exhaust gas recirculation valve -N18-

Special tools and workshop equipment required

- Adapter cable (68-pin) -V.A.G 1598/18A- or adapter -V.A.G 1598/22-
- Hand multimeter -V.A.G 1526C- or multimeter -V.A.G 1715-
- Auxiliary measuring set -V.A.G 1594C-
- Current flow diagram

Test procedure

– Pull connector off exhaust gas recirculation valve -N18- ⇒ page 42 .

– Measure resistance at exhaust gas recirculation valve -N18- .

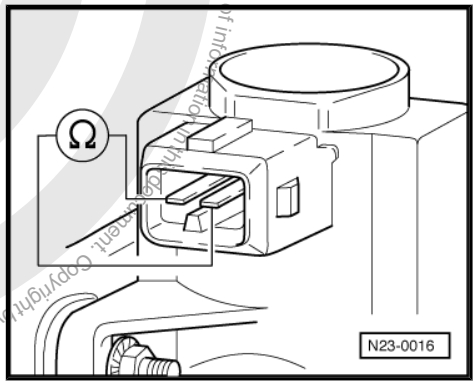

Specification:

Engine codes AGD, AHG: 52.5…62.5 Ω

Engine code AKU: 14…18 Ω

If the specification is not achieved:

– Renew exhaust gas recirculation valve -N18-

Note

At room temperature, the resistance is in the lower tolerance range and at engine operating temperature in the upper tolerance range.

3.13.1 Checking exhaust gas recirculation valve -N18- voltage supply

– Pull connector from valve ⇒ page 42 .

Protected by copyright. Copyright by Volkswagen AG. Volkswagen AG does not guarantee or accept any liability with respect to the correctness of information. Copyright by Volkswagen AG.
satelettronica

– Connect hand-held multimeter -V.A.G 1526C- to connector contact 1 and engine ground using auxiliary lines from auxiliary measuring set -V.A.G 1594C- .

– Switch on ignition.

– Specification: approx. battery voltage

If the specification is not achieved:

– Switch off ignition.

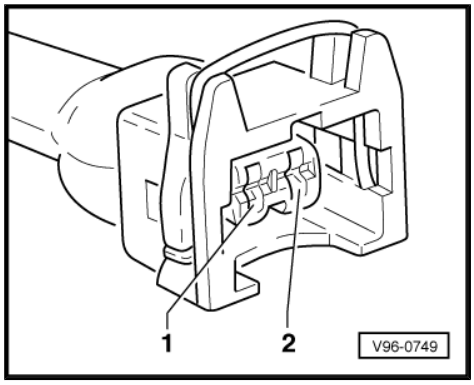

Engine code AGD (with 68-pin control unit)

– Connect adapter cable, 68-pin -V.A.G 1598/18A- to control unit wiring harness.

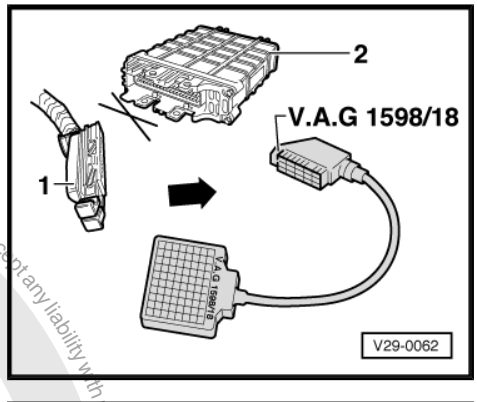

– Check lines between adapter cable (68-pin) -V.A.G 1598/18A- and connector for open circuit according to current flow diagram. Contact 1 + socket 68 Contact 2 + socket 25.

Cable resistance: max. 1.5 Ω.

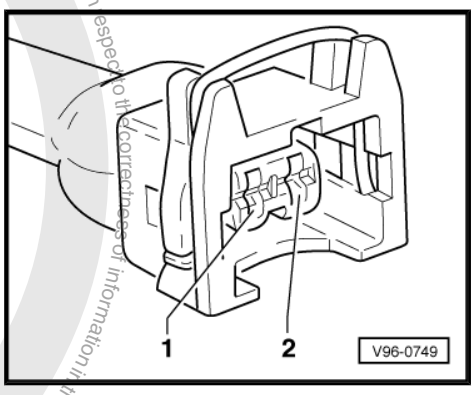

Engine codes AGD (with 80-pin control unit), AHG, AKU

– Connect adapter -V.A.G 1598/22- to control unit wiring harness.

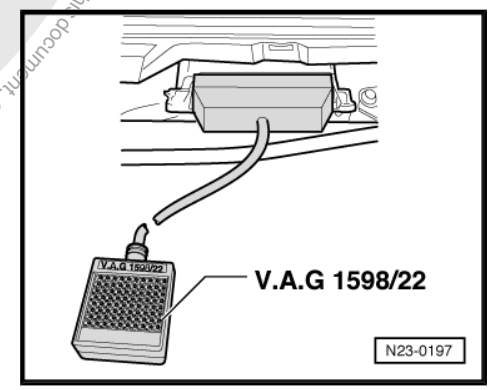

Protected by copyright. Copying for private or commercial purposes, in part or in whole, is not permitted unless authorised by Volkswagen AG. Volkswagen AG does not guarantee or accept any liability with respect to the correctness of information in this document. Copyright by Volkswagen AG.
satelettronica

– Check lines between adapter -V.A.G 1598/22- and connector for open circuit according to current flow diagram. Contact 1 +sockets 2+28 Contact 2+socket 29.

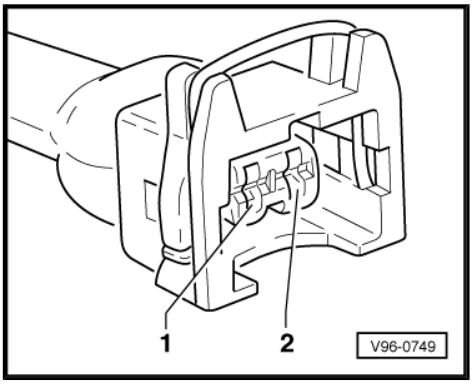

Cable resistance: max. 1.5 Ω.

Continuation for all engine codes

– Also check wiring for short to one another, short to vehicle earth and short to battery positive.

Specification: ∞ Ω.

If no fault in lines is detected:

– Renew diesel direct injection system control unit -J248- ⇒ page 96 .

3.14 Checking speedometer sender -G22-

Special tools and workshop equipment required

- Fault reader -V.A.G 1551- or vehicle system tester -V.A.G 1552- with diagnosis cable -V.A.G 1551/3-
- Adapter cable (68-pin) -V.A.G 1598/18A- or adapter -V.A.G 1598/22-
- Hand multimeter -V.A.G 1526C- or multimeter -V.A.G 1715-
- Voltage tester -V.A.G 1527B-
- Auxiliary measuring set -V.A.G 1594C-
- Current flow diagram

Test prerequisite

- Speedometer OK., checking ⇒ Electrical System; Rep. Gr. 90

Note

To check the speed signal the vehicle must be driven. To do this a second person is necessary.

WARNING

Secure fault reader to rear seat and operate from this position.

Test procedure

– Connect fault reader -V.A.G 1551- or vehicle system tester -V.A.G 1552- and select engine electronics control unit with “address word 01”. Engine must be idling. (Connect fault reader -V.A.G 1551- and select engine electronics control unit ⇒ page 2 .)

Indicated on display:

```
Rapid data transfer                HELP
Select function XX
```

– Press buttons 0 and 8 for function “Read measured value block” and confirm entry with Q button.

Indicated on display:

```
Read measured value block          HELP
Input display group number XXX
```

– Press buttons 0, 0 and 6 for “Display group number 6” and confirm entry with Q button.

Protected by copyright. Copying for private or commercial purposes, in part or in whole, is not permitted unless authorised by Volkswagen AG. Volkswagen AG does not guarantee or accept any liability with respect to the correctness of information in this document. Copyright by Volkswagen AG.
satelettronica

– Carry out a road test and compare display with speedometer (2nd person required).

Specification display zone 1: Approx. road speed.

```
Read measured value block 6          ->
    0 km/h     0  0  0    000000     255
```

– Press [→] button.

– Press buttonss [0] and [6] for function “End output” and confirm entry with [Q] button.

If no speed is indicated:

Engine code AGD (with 68-pin control unit)

– Connect adapter cable, 68-pin -V.A.G 1598/18A- to control unit wiring harness.

– Bridge sockets 1+42 with auxiliary lines from -V.A.G 1594- .

– Set voltage measuring range on hand-held multimeter -V.A.G 1526C- or multimeter -V.A.G 1715- and connect between sockets 43 + 33 of adapter cable (68-pin) -V.A.G 1598/18A- .

– Switch on ignition.

– Raise and rotate left front wheel.

Specification:

Between 0 and 5 volt fluctuating

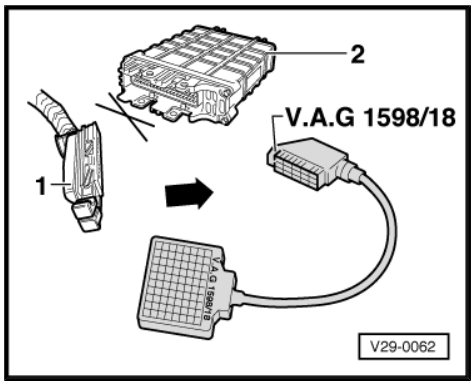

Note

If necessary, hold the front right wheel to prevent it from turning.

If the display does not fluctuate:

– Check lines to speedometer/speedometer sender ⇒ Current flow diagrams, Electrical fault finding and Fitting locations

Engine codes AGD (with 80-pin control unit), AHG, AKU

– Connect adapter -V.A.G 1598/22- to control unit wiring harness.

– Connect voltage tester -V.A.G 1527B- between socket 1 (ground) and socket 51 (speed signal).

– Switch on the ignition and turn the front left wheel by hand.

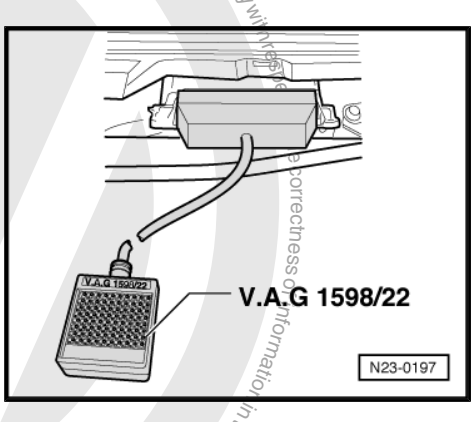

Note

If necessary, hold the front right wheel to prevent it from turning.

– The voltage tester -V.A.G 1527B- must flash (approx. four times per wheel rotation).

– If the voltage tester -V.A.G 1527B- does not flash, check line connection from engine control unit connector contact 51 to dash panel insert for open/short circuit. ⇒ Current flow diagrams, Electrical fault finding and Fitting locations

3.15 Checking accelerator position sender - G79-

The accelerator position sender -G79- is located on the accelerator pedal and passes the driver's requirement on to the control unit.

Protected by copyright. Copyright by Volkswagen AG. Volkswagen AG does not guarantee or accept any liability with respect to the correctness of information in this document. Copyright by Volkswagen AG.
satelettronica

Special tools and workshop equipment required

- Fault reader -V.A.G 1551- or vehicle system tester -V.A.G 1552- with diagnosis cable -V.A.G 1551/3-
- Adapter cable (68-pin) -V.A.G 1598/18A- or adapter -V.A.G 1598/22-
- Hand multimeter -V.A.G 1526C- or multimeter -V.A.G 1715-
- Auxiliary measuring set -V.A.G 1594C-
- Current flow diagram

Test procedure

– Connect fault reader -V.A.G 1551- or vehicle system tester -V.A.G 1552- and select engine electronics control unit with “address word 01”. The ignition must be switched on for this purpose. (Connect fault reader -V.A.G 1551- and select engine electronics control unit ⇒ page 2 .)

Indicated on display:

```
Rapid data transfer                    HELP
Select function XX
```

– Press buttons 0 and 8 for function “Read measured value block” and confirm entry with Q button.

Indicated on display:

```
Read measured value block              HELP
Input display group number XXX
```

– Press buttons 0, 0 and 2 for “Display group number 2” and confirm entry with Q button.

– Check accelerator position display in display zone 2. The accelerator pedal must not be depressed.

Specification: 0.0%

```
Read measured value block 2             ->
0 rpm      0.0 %      0 1 0        18.4 °C
```

– In addition check the idling speed switch display in display zone 3. The middle position must show 1. Display: 010

– Depress accelerator pedal slowly until fully down, and observe display zones 2 and 3.

```
Read measured value block 2             ->
0 rpm      100.0 %     0 0 0        18.4 °C
```

- Display zone 2: The accelerator pedal position value must increase continuously. Specification at full throttle position: 100 %
- Display zone 3: The middle position must change to 0. Display: 000

End specification value not achieved:

– Press ↵ button.

– Press buttons 0 and 6 for function “End data transfer” and confirm entry with Q button.

– Switch off ignition.

– Adjust accelerator position sender -G79- ⇒ page 47 .

Display does not change or is erratic:

– Check accelerator position sender -G79- as follows:

– Press ↵ button.

– Press buttons 0 and 6 for function “End data transfer” and confirm entry with Q button.

– Switch off ignition.

Copyright by Volkswagen AG. Volkswagen AG does not guarantee or accept any liability with respect to the correctness of information in this document. Protected by copyright. Copying for private or commercial purposes, in part or in whole, is not permitted unless authorised by Volkswagen AG.
satelettronica

– Disconnect connector for accelerator position sender -G79- -1-.

– Measure resistance of sender between contacts 1+3 of connector.

Specification:

Accelerator pedal in idle position: 1.0…1.5 kΩ

Accelerator pedal in full-throttle position: 1.5…2.5 kΩ

– Measure resistance between connector contacts 4+6.

Specification:

Accelerator pedal in idle position: Max. 1.5 kΩ

Accelerator pedal depressed: ∞ Ω

If the specifications are not achieved:

– Renew accelerator position sender -G79- ⇒ Item 2 (page 46)

If the specifications are attained:

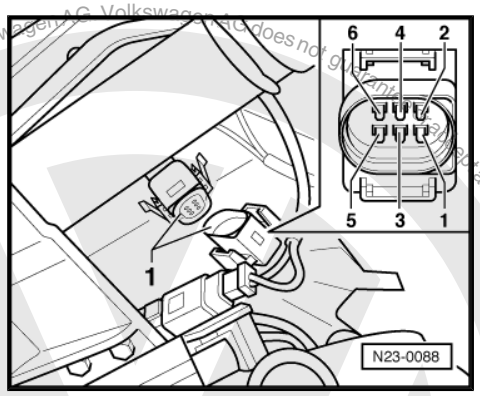

Engine code AGD (with 68-pin control unit)

– Connect adapter cable, 68-pin -V.A.G 1598/18A- to control unit wiring harness.

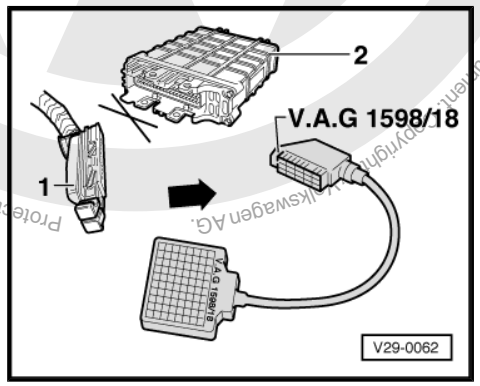

– Check lines between adapter cable (68-pin) -V.A.G 1598/18A- and connector for open circuit according to current flow diagram. Contact 1+socket 15 Contact 2+socket 57 Contact 3 +socket 55 Contact 4+socket 65 Contact 5+socket 62 Contact 6+socket 33.

Cable resistance: max. 1.5 Ω.

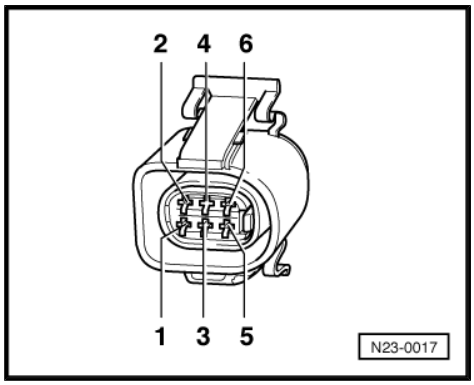

Engine codes AGD (with 80-pin control unit), AHG, AKU

– Connect adapter -V.A.G 1598/22- to control unit wiring harness.

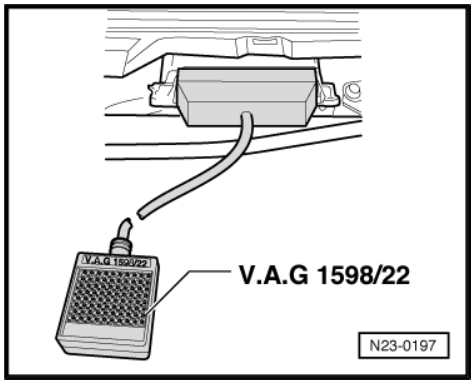

Protected by copyright. Copying for private or commercial purposes, in part or in whole, is not permitted unless authorised by Volkswagen AG. Volkswagen AG does not guarantee or assume any liability with respect to the correctness of information in this document. Copyright by Volkswagen AG.
satelettronica

– Check lines between adapter -V.A.G 1598/22- and connector for open circuit according to current flow diagram. Contact 1 +socket 24 Contact 2+socket 11 Contact 3+socket 23 Contact 4+socket 12 Contact 5+socket 8 Contact 6+socket 25.

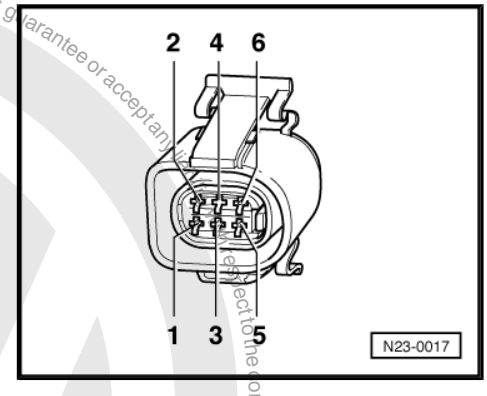

Cable resistance: max. 1.5 Ω.

Continuation for all engine codes

– Also check wiring for short to one another, short to vehicle earth and short to battery positive.

Specification: ∞ Ω.

If no fault in lines is detected:

– Renew diesel direct injection system control unit -J248- ⇒ page 96

Protected by copyright. Copying for private or commercial purposes, in part or in whole, is not permitted unless authorised by Volkswagen AG. Volkswagen AG does not guarantee or accept any liability with respect to the correctness of information in this document. Copyright by Volkswagen AG.
satelettronica

4 Renewing, coding and matching engine control unit

4.1 Renewing engine control unit

Special tools and workshop equipment required

- Fault reader -V.A.G 1551- or vehicle system tester -V.A.G 1552- with diagnosis cable -V.A.G 1551/3-

Procedure

– First print out the control unit identification and thereby the previous control unit coding as follows:

– Connect fault reader -V.A.G 1551- or vehicle system tester -V.A.G 1552- and select engine electronics control unit with “address word” 01 ⇒ page 2 ; connect fault reader -V.A.G 1551- and select engine electronics control unit.

The fault reader -V.A.G 1551- display will show the control unit identification, e.g.:

```
028906021BN 1.9 l R4 EDC     00SG_0903 ->
Coding 00002                   WSC 0000
```

– Print out the control unit identification by pressing the Print button on fault reader -V.A.G 1551- .

– Press → button.

– Press buttonss 0 and 6 for function “End output” and confirm entry with Q button.

– Switch off ignition.

Removing engine control unit

– Remove plenum chamber cover.

– Release and pull off control unit connector.

– Unclip the control unit from the retainer.

– Install new control unit.

– Check the previous coding and the coding of the new control unit ⇒ page 96 .

– Adapt engine control unit to electronic immobilizer ⇒ page 97 .

– Then interrogate the fault memory of the new engine control unit and erase the fault memory if necessary, clear fault memory ⇒ page 15

4.2 Coding engine control unit

There are control units which may not be coded and those which must be coded.

Therefore, have the control unit identification displayed first.

Special tools and workshop equipment required

- Fault reader -V.A.G 1551- or vehicle system tester -V.A.G 1552- with diagnosis cable -V.A.G 1551/3-

Procedure

– Connect fault reader -V.A.G 1551- or vehicle system tester -V.A.G 1552- and select engine electronics control unit with “address word 01”. When doing this the ignition must be

Protected by copyright. Copying for private or commercial purposes, in part or in whole, is not permitted unless authorised by Volkswagen AG. Volkswagen AG does not guarantee or accept any liability with respect to the correctness of information in this document. Copyright by Volkswagen AG.
satelettronica

switched on. (Connecting fault reader and selecting engine electronics control unit ⇒ page 2 .)

If the fault reader -V.A.G 1551- display shows this control unit identification, the control unit must not be coded.

```
028906021C  1.9 l  R4  EDC SG     D.. ->
Coding 0000                      WSC0000
```

- ♦ No zeros are located before the gearbox variant (MG or AG).
- ♦ The software version begins with a D.

If the fault reader -V.A.G 1551- display shows this control unit coding, the control unit must be coded.

```
028906021DL 1.9l R4 EDC G00SG 0828 ->
Coding 0002                   WSC XXXXX
```

- ♦ Two zeros, and possibly letters, are located before the gearbox variant (MG or AG).
- ♦ The software version consists of a 4-digit number, e.g. 0828.

– Press [→] button.

Indicated on display:

```
Rapid data transfer                HELP
Select function XX
```

– Press buttons [0] and [7] for function “Code control unit” and confirm entry with [Q] button.

Indicated on display:

```
Coding control unit                   Q
Input code number xxxxx   (0
```

– Enter appropriate code number for vehicle and confirm with [Q] button.

Code number	For vehicles with
00001	Automatic gearbox (not relevant)
00002	Manual gearbox Engine codes AGD, AHG
00005	Manual gearbox Engine code AKU

The fault reader -V.A.G 1551- display will show the control unit coding, e.g.:

```
028906021DL 1.9l R4 EDC G00SG 0828 ->
Coding 0002                   WSC XXXXX
```

– Switch ignition off and then on again.

Note

The coding entered will be activated by switching the ignition off and then on again. If after entering the valid code the ignition is not switched off and on again, the fault “Control unit incorrectly coded” cannot be erased.

– Adapt engine control unit to electronic immobilizer ⇒ page 97 .

– Clear fault memory ⇒ page 15

4.3 Adapting engine control unit to electronic immobilizer

Special tools and workshop equipment required

- ♦ Fault reader -V.A.G 1551- or vehicle system tester -V.A.G 1552- with diagnosis cable -V.A.G 1551/3-

Test prerequisite

- Authorized vehicle key available

Protected by copyright. Copying for private or commercial purposes, in part or in whole, is not permitted unless authorised by Volkswagen AG. Volkswagen AG does not guarantee or accept any liability with respect to the correctness of information in this document. Copyright by Volkswagen AG.
satelettronica

Procedure

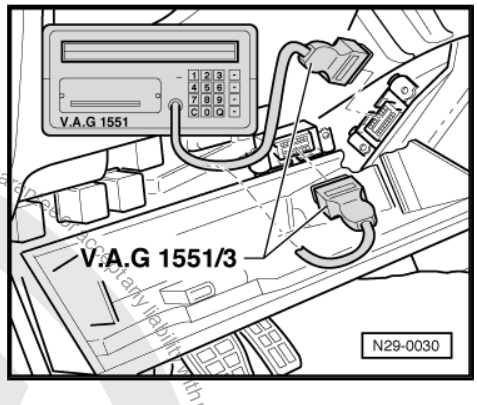

- Fold left storage compartment down.
- Connect fault reader -V.A.G 1551- or vehicle system tester -V.A.G 1552- with diagnosis cable -V.A.G 1551/3- .
- Switch on ignition.
- Operate fault reader -V.A.G 1551- or vehicle system tester -V.A.G 1552- taking into account the information on the display:
- Press button 1 for “Rapid data transfer”.
- Press buttons 2 and 5 for address word “immobilizer” and confirm the input with Q button.
- Press → button.

Indicated on display:

```
Rapid data transfer                    HELP
Select function XX
```

- Press buttons 1 and 0 for the function “Adaptation” and confirm input with the Q button.

Indicated on display:

```
Adaption
Enter channel number XX
```

- Press button 0 twice for “Channel number 0” and confirm entry with Q button.

Indicated on display:

```
Adaption                                  Q
Erase learnt values?
```

- Confirm entry with Q button.

Indicated on display:

```
Adaption                                 ->
Learnt values have been cleared
```

- Finish adaption by pressing → button.
- Press buttons 0 and 6 for function “End data transfer” and confirm entry with Q button.
- Switch off ignition.

Note

The identity of the engine control unit is read into the immobilizer control unit when next switching the ignition on.

Protected by copyright. Copying for private or commercial purposes, in part or in whole, is not permitted unless authorised by Volkswagen AG. Volkswagen AG does not guarantee or assume any liability with respect to the correctness of information in this document. Copyright by Volkswagen AG.
satelettronica

28 – Glow plug system

1 Checking glow plug system

Protected by copyright. Copying for private or commercial purposes, in part or in whole, is not permitted unless authorised by Volkswagen AG. Volkswagen AG does not guarantee or accept any liability with respect to the correctness of information. Copyright by Volkswagen AG.

Special tools and workshop equipment required

- Hand multimeter -V.A.G 1526C-

- Auxiliary measuring set -V.A.G 1594C-

Test prerequisites

- Battery voltage at least 11.5 V
- Ignition switched off
- Diesel direct injection system control unit -J248- is OK.
- Glow plug strip fuse (S 39) or (S 164) OK.

Test procedure

– Pull connector from coolant temperature sender -G62- .

Note

Pulling the connector off sender, simulates engine condition "cold" and when switching the ignition on the relevant glow period is carried out.

– Pull glow plug connectors from glow plugs.

– Connect multimeter to measure voltage between a glow plug connector and vehicle earth.

– Switch on ignition. Approx. battery voltage must be displayed for roughly 20 seconds.

– If no voltage is present: ⇒ Current flow diagrams, Electrical fault finding and Fitting locations

satelettronica

1.1 Checking glow plugs

Special tools and workshop equipment required

- ♦ Voltage tester -V.A.G 1527B-
- ♦ Auxiliary measuring set -V.A.G 1594C-
- ♦ U/J extension and socket, 10 mm -3220-

Test prerequisites

- Battery voltage at least 11.5 V
- Ignition switched off

Test procedure

– Pull glow plug connectors from glow plugs.

– Connect voltage tester -V.A.G 1527B- cable to battery positive (+), using clips from auxiliary measuring set.

– Place test probe of voltage tester -V.A.G 1527B- on each glow plug one after the other. If diode lights up, glow plug is OK. If diode does not light up, replace glow plug.

– Remove and install glow plugs with U/J extension and socket, 10 mm -3220- .

Specified torque: 15 Nm.

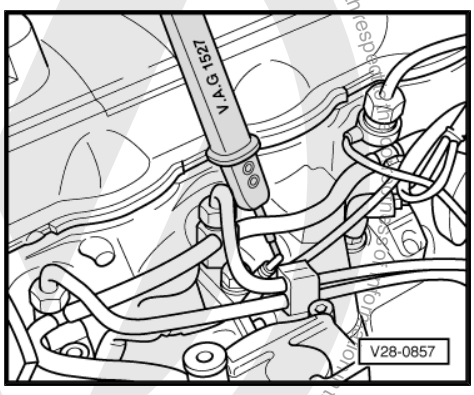

Protected by copyright. Copying for private or commercial purposes, in part or in whole, is not permitted unless authorised by Volkswagen AG. Volkswagen AG does not guarantee or accept any liability with respect to the correctness of information in this document. Copyright by Volkswagen AG.
satelettronica